Tender Document Section 4

Technical Specifications (Note 3)

Note:

Where in this tender document a standard is quoted, it is to be understood that the NGO will accept equivalent standards. However, it will be the responsibility of the respective bidders to prove that the standards they quoted are equivalent to the standards requested by the NGO.

CONTENTS

1. Scope 4

2. Objectives 4

3. Location of investigation 6

4. Accessibility 7

5. Normative references 8

6. Terms and definitions 8

6.1 Investigation methodology 8

6.2 Drilling rigs and equipment 9

6.3 Sampling 9

7. Drilling rigs and ancillary equipment 12

7.1 Requirements for drilling rigs and equipment 12

Drilling equipment requirements 13

8. Open-hole drilling 14

9. General requirements and prerequisites for sampling by drilling and excavation 15

9.1 Selection of techniques and methods 15

9.2 Requirements for ground investigation sites and points 16

Preliminary information needed before starting drilling and sampling 16

Back-filling and site abandonment 17

9.3 Safety requirements 17

9.4 Soil Sampling Methods 17

Categories of soil sampling methods 17

Sampling by drilling (continuous sampling) 18

Sampling by rotary drilling 21

Sampling using push-in samplers 22

1.2.1.1.5 Sampling using the open-tube sampler 25

Block sampling 28

9.5 Rock sampling methods 29
General 29
Categories for rock sampling methods 30
Sampling by drilling 32
Block sampling 33
9.6 Handling, transport and storage of samples 33
General 33
Preservation materials and sample containers 34
Handling of samples categories A and B 34
Transport of soil samples 35
Transport of rock samples 35
Preparation of storage and shipping containers 36
Storage of samples 36
Labelling of samples 36
10. Tests in boreholes or on the retrieved borehole core 37
10.1 Standard Penetration Test (SPT) 37
10.2 Down Hole Seismic test (DH) 38
11. Borehole logs 39
11.1 Borehole identification and location, project and client identification, site location 39
11.2 Drilling record 39
11.3 Stratigraphy - identification and description of soil and rock 40
11.4 Groundwater levels 41
11.5 Undisturbed sampling, site tests and laboratory test record 41
11.6 Installations 42
11.7 Back-filling record 42
11.8 Photos of retrieved core samples 42
12. Georadar investigation 42
12.1 Ground Penetrating Radar: 43
13. Laboratory Tests 44
13.1 Special requirements for oedometer tests 44
13.2 Special requirements for triaxial tests 45
13.3 Uniaxial compression tests for determining the uniaxial compression strength. 46
13.4 Uniaxial compression tests for determining deformability in uniaxial compression. 47
13.5 “Brazilian tests” for determining the indirect tensile strength 51
14. Foundation Investigation 53
14.1 Inclined boreholes for foundation investigation 54

14.2 Trial pits 54
15. Structural investigation 56

1. Scope

Santa Marija Church, Birkirkara is a prime example of the rich cultural and architectural heritage of the Maltese Islands. Unfortunately, this church has a long history of structural problems that have at times rendered it unserviceable and even led to its partial collapse in the mid-nineteenth century. At present, less than 20 years after completing the restoration process, a number of cracks are once again visible in the structure, and there are strong indications that these are developing further. In recent years, there have been a number of instances when pieces of mortar fell down from the vault of the main nave, luckily at times when the church was not being used.

Recent studies have revealed that the observed movement is likely to be related to movement at foundation level. The church is founded on a relatively weak layer of weak Middle Globigerina limestone that may be crushing under the imposed load from the church vaults and dome, at points of stress concentration. There are indications that the church has settled unevenly over the period of its existence. Mitigating the effects of this is likely to require intervention at foundation level.

Any kind of intervention within or below the church needs to be studied very carefully before works are implemented on site, since such works are likely to be very disruptive and costly. Although the ground beneath the church has been investigated before, further ground investigation is deemed to be required. This proposed ground investigation is designed to target specific unknowns, in preparation for future numerical modelling to simulate possible interventions.

For the purposes of this document, the following terms and definitions apply.

The Client: The Archdiocese of Malta

Engineer: The geotechnical engineer, or his representative, appointed by the client, Dr. Adrian Mifsud

NOTE Additional terms and definitions can be found in Section XX below and in the standards references in Section XX below

2. Objectives

Specifically, this ground investigation aims to:

1. To obtain further information on the sequence, thickness and orientation of the various facies that define the Middle Globigerina layer and the underlying Lower Globigerina limestone. In this respect, the following strata are known to exist beneath the church:
   (a) A fossil-rich layer of Middle Globigerina limestone that exists very close to the bearing level of the church foundations. The thickness and elevation of this layer needs to be carefully identified all around the outer perimeter of the church. This layer is typically only a few centimetres thick.
   (b) Middle Globigerina limestone, known to exist immediately above and below the fossil-rich layer. This is known to be a weak material that is also relatively compressible in the long term. This material is known to exist in two different states, both of which are very finely textured - a weak rock of a whitish colour, and a similarly weak rock of an olive-grey colour. There is no apparent pattern that defines the two varieties, with the two different materials occurring rather randomly beneath the church. This would need to be studied in greater detail and the differences between the two materials would need to be investigated.
   (c) Lower Globigerina limestone, known to exist below the Middle Globigerina Limestone, and generally stiffer than this latter layer. This is expected to be a stronger material that

could provide a competent stratum for founding the consolidation intervention.

The above will be achieved by borehole drilling with full core recovery.

2. To recover soil and rock samples of quality sufficient to enable the following assessments to be made:
   (a) Basic identification and classification tests (carbonate content, bulk density (BS1377-part 2), unconfined compression strength (ISRM suggested methods)) to create a ground profile, with tests at 1m intervals from the chosen boreholes.
   (b) Basic identification and classification tests (Atterberg limits (BS1377-part 2) , particle size distribution and particle density (Specific Gravity) (BS1377-part 2) at chosen intervals from the boreholes.
   (c) Determination of elastic properties of the various weak rocks at intermediate to large strain, via instrumented specimens that are then crushed in unconfined compression, in accordance with ISRM suggested methods. These will be used to determine the Young's modulus and Poisson's ratio of the material, and how these two parameters vary as peak strength is approached. These tests will need to be done on the rock in its saturated state (oven drying to fix strain gauges is not allowed)
   (d) Compressibility of the various weak rocks, via high-pressure oedometer tests (up to 20MPa), inclusive of creep stages (i.e. Individual loading stages of 5-day duration), and unload-reload cycles (unload cycles to have 1 day duration).
   (e) Shear strength, via consolidated drained tests with backpressure not less than 800kPa and mean confining pressure (p') at 200, 600 and 1500kPa (this requires a triaxial cell capable of resisting at least 2500kPa.

   Samples of the various weak rocks will need to be sourced from the recovered borehole core and from block samples taken in trial pits excavated next to the church foundations.

3. To carry out in-situ tests within the boreholes as drilled and within trial pits. This will include the following tests:
   (a) Standard penetration tests at specific intervals within some of the boreholes, as instructed by the geotechnical engineer.
   (b) Downhole seismic tests in boreholes chosen by the geotechnical engineer
   (c) Plate loading tests, carried out within the trial pits. Since these will be carried out on rock, a suitable seating for the plate (760mm diameter) will need to be created using Plaster of Paris, spread beneath the plate, levelled and then left to harden overnight. A suitable loading column in steel will need to be provided to transfer the necessary force to the loaded truck that would typically be providing the necessary kentledge (required to provide the necessary reaction)

4. To define the extent and shape of the foundations of the existing church in its various zones, their composition, as well as to identify the actual founding stratum existing immediately below these same foundations. This will be achieved by excavating trial pits and by drilling inclined boreholes through the masonry foundations, below the existing ground level.

5. To assess the nature of the terrain in the immediate vicinity of the church, for the purposes of assessing its suitability for sustaining construction plant that would be required during the consolidation intervention. It is widely suspected that a graveyard exists next to the church, to

the north. The extent and construction of this graveyard will need to be determined by

(a) Geophysical techniques (Group penetration radar or Electrical Resistivity Tomography)

(b) Intrusive investigation, in the form of small trial pits that would attempt to identify the construction typology of any buried chambers that may exist.

6. To assess the structural characteristics of some of the masonry elements that constitute the structure of the church. This will include some rotary coring of elements forming part of the original church structure, and then testing these in unconfined compression with axial and radial strain measurement, without previous oven drying.

3. Location of investigation

The ground investigation will be carried out in the external and internal areas of Santa Marija Church, in Birkirkara, Malta, including its surrounding paved areas, as shown in Fig 2-1 below.

Figure 3-1 – Proposed area of ground investigation

The various items outlined in Section 2 are required in the locations shown in Figure3-2 below:

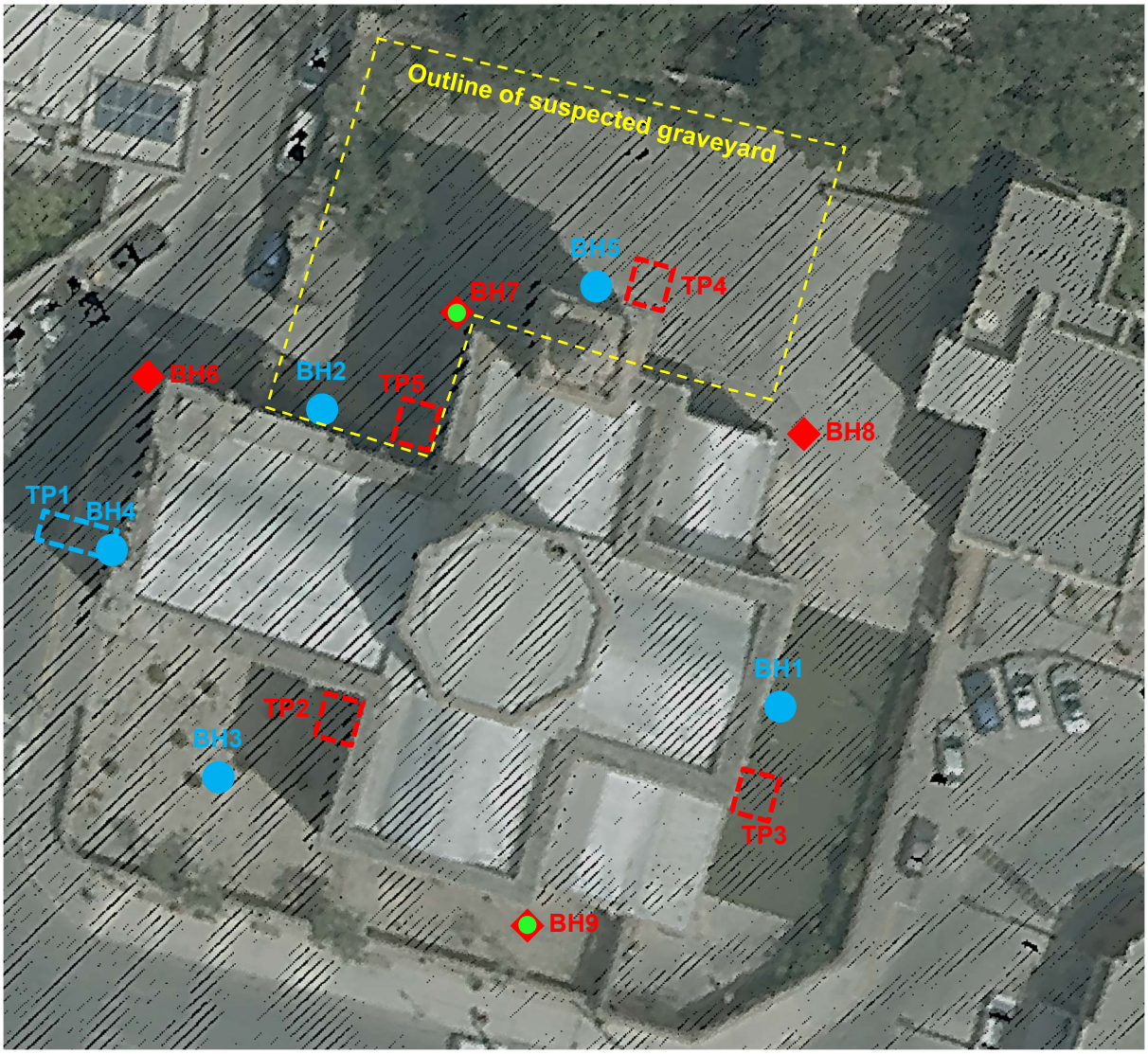

Figure 3-2 – Proposed investigative work for ground investigation, showing boreholes and trial pits that need to be drilled or excavated.

Legend

BH2	Boreholes drilled prior to this investigation
TP1	Trial pit excavated and then reinstated prior to this investigation
BH6	Boreholes to be drilled during this investigation
TP2	Trial pits to be excavated and then reinstated during this investigation
BH7	Boreholes to be drilled during this investigation and then prepared for downhole seismic

4. Accessibility

The site, and the areas around the church are fully accessible by typical vehicles. The open courtyard to the North of the Church is fully accessible, even by trucks, which can reach all the way to the back of the church. The capacity of the ground is however not guaranteed to sustain *any* kind of loading. As shown in Figure 3-2, this paved area is widely suspected to be located on a buried graveyard that is several centuries old. This may therefore contain cavities whose roof may not necessarily sustain the

loads from vehicles and plant related to the ground investigation. This area has been, however regularly trafficked by small passenger vehicles and vans.

The zone to the south of the church is also accessible, but this area is paved, and some steps exist between the road passing in front of the church and this lower area. A suitable ramp or backfill is therefore required for vehicles and plant to access this area. Tracked vehicles will also need to travel on rubber mats to prevent damage to the existing pavement.

5. Normative references

This specification deals with principles of the investigation of ground, rock and groundwater as subsoil and construction materials. It defines concepts and specifies requirements relating to sampling by drilling, excavation and other test activities.

The European Standard *MSA EN 1997-2, Eurocode 7: Geotechnical design — Part 2: Ground investigation and testing* incorporates (by dated or undated reference), provisions from other publications. These normative references are quoted at the appropriate places in the text and the publications are listed hereafter. For dated references, subsequent amendments to or revisions of any of these publications apply to this European Standard only when incorporated in it by amendment or revision. For undated references, the latest edition of the publication referred to applies.

EN 791, Drilling rigs — Safety.

MSA EN 1997-1, Eurocode 7: Geotechnical design — Part 1: General Rules.

MSA EN 1997-2, Eurocode 7: Geotechnical design — Part 2: Ground investigation and testing.

prEN ISO 22475-2, Geotechnical investigation and testing — Sampling by drilling and excavation methods and groundwater measurements — Part 2: Technical qualification criteria.

prEN ISO 22475-3, Geotechnical investigation and testing — Sampling by drilling and excavation methods and groundwater measurements — Part 3: Conformity assessment for enterprises and personnel.

EN ISO 14688-1, Geotechnical investigation and testing — Identification and classification of soil — Part 1: Identification and description.

EN ISO 14689-1, Geotechnical investigation and testing — Identification and classification of rock — Part 1: Identification and description.

ISO 3551-1, Rotary core diamond drilling equipment — System A — Part 1: metric units. ISO 3552-1, Rotary core diamond drilling equipment — System B — Part 1: metric units. ISO 10381 (all parts), Soil quality — Sampling.

6. Terms and definitions

6.1 Investigation methodology

Borehole: a hole of any predetermined diameter and length formed in any geological formation or man-made material by drilling.

> NOTE: Investigations carried out in such a hole may be to recover rock, soil or water samples from a specified depth or to carry out in situ tests and measurements.

Drilling: the process by which a borehole is produced in any geological formation by rotary, rotary percussive, percussive or thrust methods and in any predetermined direction in relation to the drill rig.

Drilling method: the technique employed to produce and stabilise the borehole, and at the same time, remove cuttings from the borehole.

6.2 Drilling rigs and equipment

Drilling tool: the device, which attached to or an integral part of the drill string, used for penetrating the geological formation as a cutting tool.

Drill bit/drilling crown: a device attached to, or an integral part of the drill string that is used as a cutting tool to penetrate the formation being drilled by the drilling method employed.

Drill rig: the machine which, when used in conjunction with the correctly selected in-hole equipment will carry out the drilling function.

Casing: lengths of tubing, threaded at either end, inserted into a borehole to prevent the hole from caving in or to prevent the loss of flushing medium to the surrounding formation.

Flushing medium: medium continuously supplied to the drilling tool to facilitate the removal of cuttings or samples to the surface, stabilise the borehole, lubricate and cool the drilling tool. Unless otherwise stated, this is assumed to be fresh water.

Flushing additive: a product, which can be added to the flushing medium in order to affect or change its properties to improve sampling operations.

NOTE: Bentonite and polymers are flushing additives for example.

Core lifter: a split, internally slotted or serrated conical spring steel ring fitted to the core barrel to hold and retain the core sample whilst the core barrel is being hoisted from the borehole.

Sample retainer: a cylindrical device containing flexible spring fingers, hinged wedged shaped fingers or a hinged flap mounted in a carrier ring and mounted at the lower end of the sampler tube and used to retain the sample in the tube as the sampler is being lifted from the ground.

6.3 Sampling

Sampling by using sampler: a process by which samples are obtained by samplers from trial pits, headings, shafts or borehole bottom at selected positions.

Sample: a defined amount of soil or rock recovered from recorded depth.

Borehole sample: a sample obtained from a borehole.

Core, core sample: a cylindrical sample of soil or rock obtained from a borehole drilled by rotary coring techniques

Drilling run: a drilling operation consisting of 1) the assembly of a length of drill string, with the purpose of reaching a specific depth, 2) the drilling/coring/sampling operation and 3) the stepwise dismantling of the drill string to retrieve the sampling tool to the surface. A new run is initiated ever time that the drilling string is re-assembled. A borehole with full core recovery may thus require several drilling runs to reach the specified depth. Additional drilling runs may be required for the extraction of undisturbed samples, or for down-hole in-situ tests such as the Standard Penetration Test. A drilling run is thus measured and defined over the depth of penetration achieved by the drill string, as measured from the vertical movement of the drilling head at the surface.

Core loss: the loss of core material over a length defined as the difference between a drilling run and the length of recovered core.

Area ratio C_a: one of the factors that determines the mechanical disturbance of the soil being the ratio of the volume of soil displaced by the sampler tube in proportion to the volume of the sample (see Figure 6-1)

$$C_a = \frac{D_2^2 - D_1^2}{D_1^2} \cdot 100 \text{ in } \%$$

Inside clearance ratio C_i: One of the factors that determine the mechanical disturbance of the sample caused by the friction on the inside wall of sample tube or of the liner (see Figure 6-1):

$$C_i = \frac{D_3 - D_1}{D_1} \cdot 100 \text{ in } \%$$

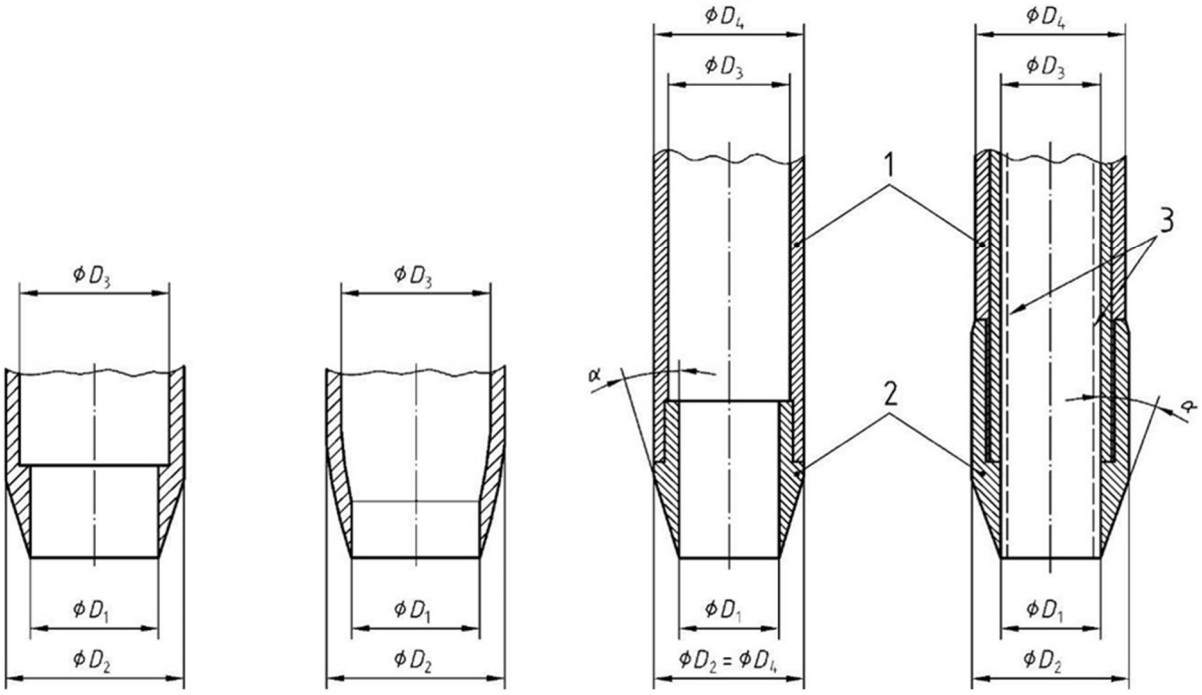

Key

D_1	inside diameter of the cutting shoe	α	taper angle
D_2	greatest outside diameter of the cutting shoe	1	sample tube
D_3	inside diameter of the sample tube or liner	2	cutting shoe
D_4	outside diameter of the sample tube	3	liner (optional)

Figure 6-1- Definitions of the diameters *D*1, *D*2, *D*3 and *D*4

Outside clearance ratio C_o:

$$C_o = \frac{D_2 - D_4}{D_4} \; 100 \text{ in } \%;$$

Total core recovery in rock TCR: the total length of core sample recovered (solid and non intact), expressed as a percentage of the length of the drilling run (see Figure 6-2)

Rock quality designation RQD: the sum length of all core pieces that are 100 mm or longer, measured along the centre line of the core, expressed as a percentage of the length of the drilling run (see Figure 6-2).

Solid core recovery SCR: the length of core recovered as solid cylinders, expressed as a percentage of the length of the drilling run (see Figure 6-2)

NOTE a solid core has a full diameter, uninterrupted by natural discontinuities, but not necessarily a full circumference and is commonly measured along the core axis or other scan line.

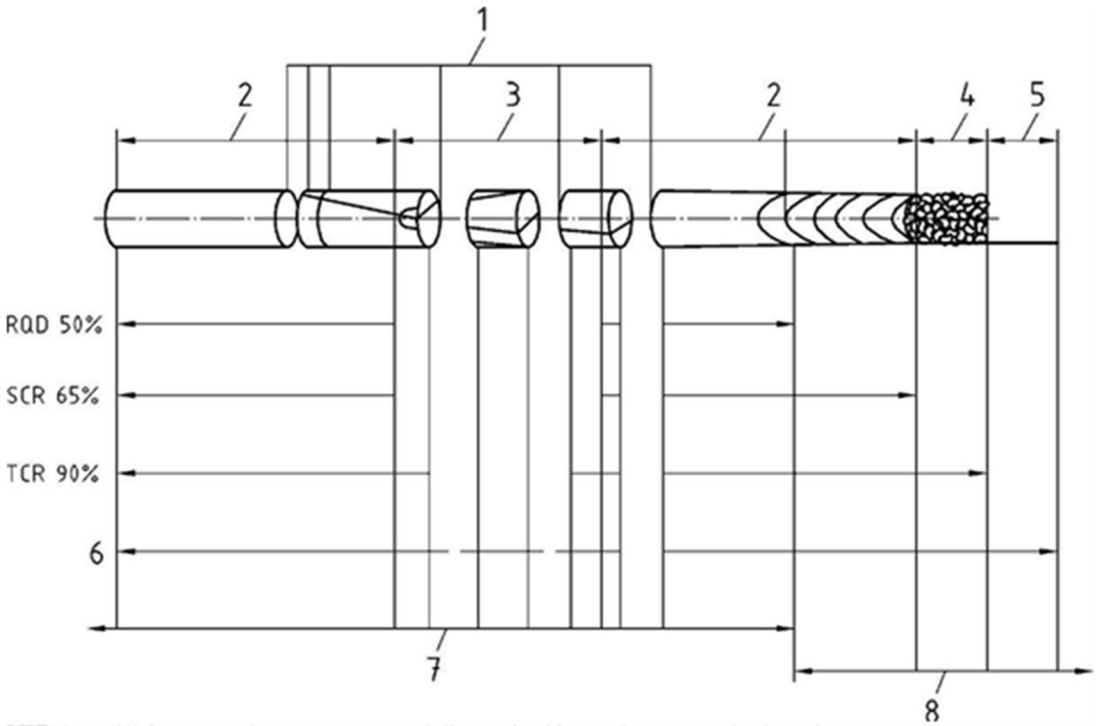

NOTE 1 All features shown are natural discontinuities unless stated otherwise.

NOTE 2 It is conventional to include only natural fractures in determining the indices RQD, SCR and TCR.

Key

1 drilling induced fractures
2 at least one full diameter
3 no single full diameter
4 non-intact (NI)
5 no recovery
6 core run
7 if NI/250/450
8 if NI/50/150

Description of fracture state of rock cores:
RQD rock quality designation
SCR solid core recovery
TCR total core recovery

Figure 6-2- Quality of rock recovery

Thin-walled sampler: soil sampler that has an area ratio less than 15%; if the taper angle is less than 5º and the thickness of the cutting edge is less than 0.3 mm, the area ratio can be between 15 % and 25%.

Thick-walled sampler: soil sampler that has an area ratio larger than that of thin-walled sampler.

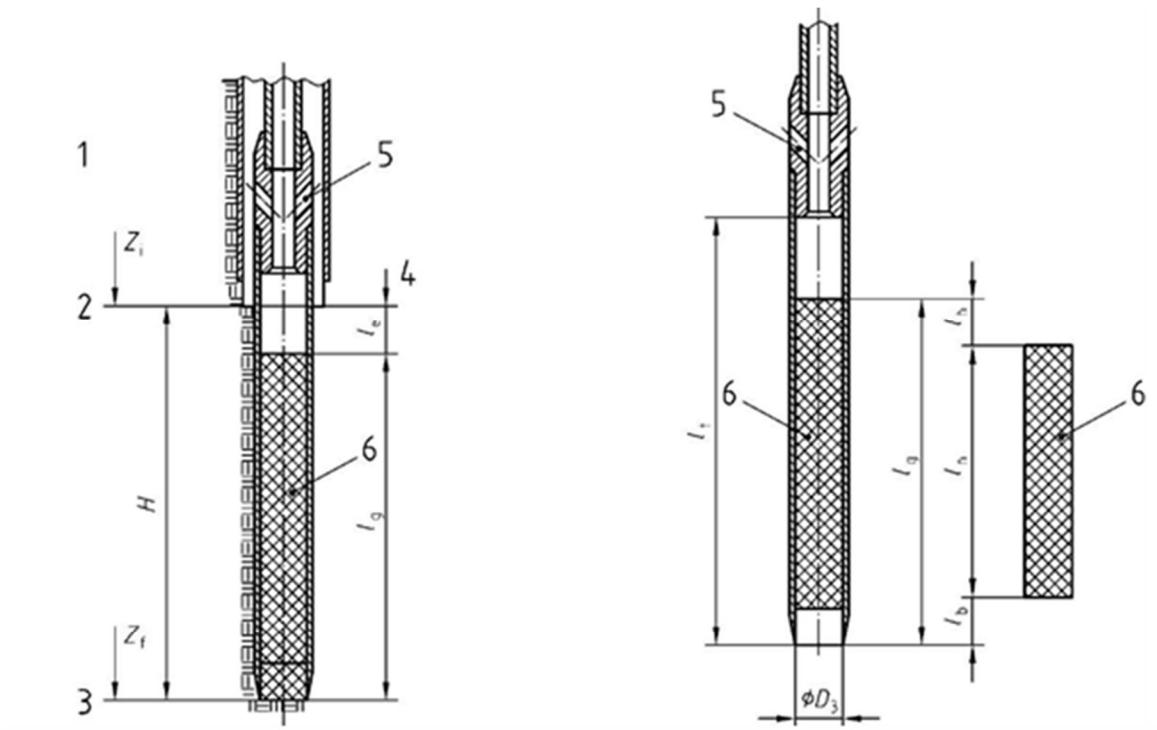

a) before withdrawal of sampler

b) after withdrawal of sampler

Key

1 casing
2 beginning of coring
3 end of coring
4 bottom of predrilled borehole
5 vent-hole
6 sample
D_3 the inside diameter of the sample tube or liner
H length of the core run
Z_f depth under the natural ground level of the lower end of the sampler after sampling and before withdrawing the sampler
Z_i depth under the natural ground level of the borehole bottom before sampling, and of the beginning of the following core run
l_b length of the lower part of the sample, which was remoulded or lost
l_e difference between the core run and the actual length of the sample
l_g total length of the sample after withdrawal of the sampler, measured from the top of the sample to the cutter edge, including the remoulded or lost parts at both ends of the sample
l_h length of the remoulded or polluted upper part of the sample
l_n net length of the sample, before its conditioning
l_t effective (useful) length of the sampling tube

Figure 6-3- Lengths of core run and sample

7. Drilling rigs and ancillary equipment

The drilling and sampling equipment selected shall be of the appropriate size and type in order to produce the required quality. The chosen equipment shall be of sufficient weight to provide the necessary reaction when pushing thin-wallled samplers into the ground, for the extraction of undisturbed samples.

If applicable, the drilling and sampling equipment shall be in accordance with ISO 3351-1, ISO 3352-1 and ISO 10097-1.

7.1 Requirements for drilling rigs and equipment

Drilling rigs with appropriate stability, power and equipment such as drill rods, casing, core barrels and bits shall be selected in order that the required sampling and borehole tests may be carried out to the

required depth of the borehole and sampling categories.

7.1.1 Drilling equipment requirements

The drilling rig and equipment shall allow all drilling functions to be adjusted accurately. When specified, the following drilling parameters should be measured and recorded against depth:

(a) drill head rotational torque (Nm)

(b) drill head rotational speed (min^{-1});

(c) feed thrust and pulling force (kN); penetration rate (m/min);

(d) depth of hammering intervals (on/off);

(e) topographical depth (m);

(f) direction when inclined drilling;

(g) drilled length when inclined drilling (m);

(h) flushing medium pressure at the output of the pump (kPa);

(i) flushing medium circulation rate (input) (l/min);

(j) flushing medium recovery rate (l/min).

The drilling equipment, or the personnel operating it, shall be equipped with the necessary instruments to enable accurate determination of verticality, or if otherwise specified, inclination in degrees form the vertical. Such instrumentation shall be calibrated and regularly checked for errors, against similar equipment that is typically used to measure verticality (e.g. spirit levels, theodolites etc.)

8. Open-hole drilling

Open-hole drilling without sampling or core recovery entails careful timed drilling into the ground, obtaining information about the nature of the ground by monitoring the drilling parameters and the overall progress of the drilling operation. No samples of the soil or rock are retrieved, and the ground material at the borehole location is destroyed in the process.

Open-hole drilling may be carried out using tricone bits in rock or drag bits in soil. A flushing medium is generally used to remove the spoil (the returns) and the circulation and colour of this medium, and its return to the surface is carefully monitored during the process of drilling the hole.

Open-hole drilling shall be carried out using a drilling machine that is equipped with a compression spring within the drilling head. The deformation or otherwise of this spring should be carefully monitored and recorded throughout the drilling process.

Site investigation points on land, for open-hole drilling hall be marked on site before the investigation process commences. Their location and elevation shall be surveyed and recorded on a site plan on completion of the investigation.

Investigation locations shall be checked with respect to relevant hazards, underground utilities and unexpected, unexploded ordinance and if necessary appropriate actions have to be taken. Investigation locations on contaminated ground have to be dealt with by special procedures. The site investigation contractor is responsible for contacting the relevant service providers to obtain all the necessary information about buried services prior to drilling.

The results of the open-hole drilling process should include the following information:

(a) name of enterprise performing the open-hole drilling;

(b) name of client or representative;

(c) date of drilling;

(d) name and number of project;

(e) identification number of the borehole;

(f) position and elevation of the borehole;

(g) borehole direction: inclination and orientation;

(h) borehole diameter;

(i) whenever possible the depth of the free groundwater level;

(j) the specifications and the type of drilling rig and sampler used;

(k) brief description of weather conditions at time of drilling

(l) information on any attached records;

(m) name and signature of the driller responsible.

The top level of the borehole relative to the project or site datum shall be clearly indicated on the drilling logs and all stratigraphic data is to be presented in relation to depth measured from both a) surface level, and b) in relation to the site or project datum. This implies that borehole locations and levels need to be measured by a surveyor, or correlated to measurable stations within the site. Borehole logs presented without this information will be deemed incomplete and will not be considered acceptable.

All field investigations shall be recorded and reported such that third persons are able to check and understand the results.

The drilling record shall include the following essential information, organised in relation to depth and elevation:

(a) The depth of drilling, or casing advance

(b) The elevation at the start and end of the drilling run, relative to site datum. When the borehole is inclined, the elevation should be calculated and presented accordingly, since this would follow a different scale to the drilled depth.

(c) colour and colour shifts of flushing medium;

(d) the loss of flushing medium circulation, clearly indicating the depth at which this first occurred,

(e) flushing medium pressure and circulated volume;

(f) the use of casing and depth of the casing tip;

(g) the time taken to drill each successive 300mm of borehole penetration.

(h) any sudden irregular deformation of the compression spring within the drilling head, that could possibly indicate the presence of voids or very weak collapsible material.

(i) any interruptions, obstructions and difficulties encountered during the sampling operation, drilling, excavation or groundwater measurements;

The drilling logs should be accompanied by graphs that plot rate of penetration vs elevation (borehole depth corrected to site datum).

9. General requirements and prerequisites for sampling by drilling and excavation

The type and extent of sample recovery and groundwater measurements shall be specified in advance according to the purpose of the project, the geological and hydrogeological conditions and the anticipated field and laboratory testing. This information is found in section 2 above.

9.1 Selection of techniques and methods

The techniques and methods for sampling by drilling and excavation and groundwater measurements shall be selected according to the purpose of the investigations in relation to the expected geological and hydrogeological conditions.

Sampling techniques, sample transportation and storage procedures shall be selected on the basis of the required:

(a) sample quality class according to prEN 1997-2; the sample mass;

(b) the sample diameter;

(c) depending on the type of laboratory tests to be carried out.

Different degrees of disturbance of the recovered samples may be expected when using different sampling methods. The quality class of a sample taken with the same sampler may vary depending on the soil type to be sampled, the presence of groundwater and the sampling operation. The following types of sample disturbance can be generated by the adopted investigation methods:

- mechanical sample disturbance due to compression, shearing, flushing or vibration during drilling or excavation;
- sample disturbance due to release of in-situ stresses and related rebound;
- changes in material and chemical constituents such as water content and gases.

The sample diameter for soils containing large particles should be chosen by the size of the largest particles of the sampled material.

Trial pits, headings and shafts enable investigation of the ground at larger scale, for example, to get information on the composition, sequence, structure and orientation of soil and rock strata and possible soil/rock interfaces. Where the water table is close to the surface, and when dewatering techniques are

not resorted to, the depth achievable by such methods is often limited to depths above the groundwater surface and to the reach of typical excavation or boring machines. Such methods also allow determination of the ease of excavation and of direct assessment and photographic documentation of the strata in situ.

9.2 Requirements for ground investigation sites and points

Site investigation points on land shall be marked on site before the investigation process commences. **Their location and elevation shall be surveyed and recorded on a site plan on completion of the investigation.**

Investigation locations shall be checked with respect to relevant hazards, underground utilities and unexpected, unexploded ordinance and if necessary appropriate actions have to be taken. Investigation locations on contaminated ground have to be dealt with by special procedures. The site investigation contractor is responsible for contacting the relevant service providers to obtain all the necessary information about buried services prior to drilling.

Trial pits (with or without access), headings and shafts shall be constructed in accordance with appropriate national or international standards and national safety regulations. They shall be sufficiently large to permit inspection, sampling and testing to be carried out in-situ. Where necessary, they shall be protected against the effects of disturbance and weathering.

Visual logging, photographic evidence of the soil strata, sampling and in-situ tests shall be carried out immediately after excavation. The environmental impact of drilling and sampling shall be considered. Special techniques, under approval of Water Services Corporation, have to be applied in zones of groundwater extraction. The location of such zones can be obtained by contacting the Malta Resources Authority, which entity can supply a plan of groundwater extraction locations and their zones of influence, in the zone of interest.

9.2.1 Preliminary information needed before starting drilling and sampling

The contractor shall ensure that the following preliminary information shall be available on site before the sampling by drilling or excavation may start:

(a) objective of the sampling by drilling and excavation and groundwater measurements;

(b) location of the planned borehole or excavation or groundwater measurements;

(c) surveying requirements and expected geological and hydrogeological conditions;

(d) site and environmental risk assessment;

(e) hazardous assessment for contaminated sites;

(f) possible risks, e.g. underground and overhead services, traffic, unexploded ordinance, contamination;

(g) Identification number of every borehole and/or excavation;

(h) planned depth of every borehole or excavation;

(i) sampling locations, techniques and intended category of disturbance;

(j) the intended sample handling, storage and transport methodologies;

(k) the envisaged in-situ tests;

(l) borehole or excavation completion method and site reinstatement (back-filling or grouting); environmental care;

(m) emergency arrangements;

(n) name of client or representative (contact person), including contact numbers of the engineer in charge

(o) information about the intended flow of information.

9.2.2 Back-filling and site abandonment

When sampling by drilling and excavation methods is completed on site it is of the utmost importance that the site is restored and no hazards are left which would be of potential harm to the public, to livestock and to the environment in general. Back-filling shall be carried out in accordance with technical or authority requirements and taking into consideration the strata, contamination of the ground and its bearing capacity.

Every borehole and excavation shall be fenced or temporarily capped in a safe manner until the borehole and excavation is finally and permanently capped or back-filled.

Unless a borehole is required to be kept open for a specific purpose, it should be re-filled, consolidated and capped in such a manner that there will be no subsequent depression at ground level due to the settlement to the infill material.

Boreholes shall normally be filled with materials of equal or less permeability than the surrounding ground e.g. in order to avoid contamination and connections between aquifers. If mixed grout is used, it should be placed by means of a tremie or hose lowered to the base of the borehole. The tremie or hose shall be slowly raised as the grout is placed. If there is an influence on future projects special technical requirements for back-filling shall be specified in advance, e.g. for tunnel projects. Voids shall not occur during the placement of the filling material in the borehole.

The site should be left in a safe, clean and tidy state.

9.3 Safety requirements

Before setting the drill rig and associated equipment on site a site risk assessment should be carried out. The safety requirements contained in EN 791 on drilling rigs and on their use shall be complied with.

Additional national safety regulations shall be followed; e. g. regulations for:

(a) personal health- and safety equipment;

(b) clean air, if working in confined spaces;

(c) ensuring the safety of the equipment;

(d) working on contaminated land;

(e) environmental impact.

9.4 Soil Sampling Methods

Techniques for obtaining soil samples can be generally divided in the following groups:

- sampling by drilling;
- sampling using samplers;
- block sampling.

Combinations of these sampling methods are possible and sometimes required due to the geological conditions and the purpose of the investigation.

9.4.1 Categories of soil sampling methods

There are three categories A, B and C of sampling methods. For given ground conditions, they are related to the best obtainable laboratory quality class of soil samples (defined in prEN 1997-2) as shown in Table 9-1:

- category A sampling methods: samples of quality class 1 to 5 can be obtained;
- category B sampling methods: samples of quality class 3 to 5 can be obtained;

- category C sampling methods: only samples of quality class 5.

Samples of quality class 1 or 2 can only be obtained by using category A sampling methods. The intention is to obtain samples in which no or only slight disturbance of the soil structure has occurred during the sampling procedure or in handling of the samples. The water content and the void ratio of the soil correspond to that in-situ. No change in constituents or in chemical composition of the soil has occurred. Certain unforeseen circumstances such as variations in geological strata may lead to lower sample quality classes being obtained.

By using category B sampling methods, this will preclude achieving sampling quality class better than 3. The intention is to obtain samples containing all the constituents of the in-situ soil in their original proportions and the soil has retained its natural water content. The general arrangement of the different soil layers or components can be identified. The structure of the soil has been disturbed. Certain unforeseen circumstances such as variations in geological strata may lead to lower sample quality classes being obtained.

By using category C sampling methods, this will preclude achieving sampling quality class better than 5. The structure of the soil or rock in the sample has been totally changed. The general arrangement of the different soil layers or components has been changed so that the in-situ layers cannot be identified accurately. The water content of the sample may not represent the natural water content of the soil layer sampled.

Table 9-1- Quality classes of soil samples for laboratory testing and sampling categories to be used

	Quality classes of soil samples for laboratory testing according to prEN 1997-2				
	1	2	3	4	5
Sampling categories	A				
			B		
					C

9.4.2 Sampling by drilling (continuous sampling)

This sampling method allows:

(a) the identification and description of the soil at the site investigated by the borehole;

(b) the differentiation of distinct soil layers and changes of soil material;

(c) the sampling as well as the investigation and testing of samples of all strata and depths.

Continuous sampling combined with a sampling method according to category A (see Table 9-2) results in the highest quality of samples, across all ground investigation techniques achievable by drilling. Sampling by drilling is therefore the preferred sampling method for heterogeneously layered soils and weak rocks

Drilling methods and equipment shall be selected as a function of the required sampling category (see Table 9-2 and Table 9-5), tests and/or groundwater measurements to be carried out in the borehole.

Boreholes shall be stabilised, usually by casing, as drilling proceeds to prevent collapse of the borehole and caving.

When drilling below groundwater level, the diameters of borehole casings and tools and the water level in the casing pipe shall be selected as to preclude the inflow of soil into the casing. To prevent the drilling and cleaning tools from creating hydraulic failure in the soil, such tools shall be selected with sufficient annular clearance and withdrawn slowly. An adequate water pressure shall be maintained in the borehole to prevent piping.

Flushing additives should only be used provided that they do not have an adverse effect on any planned

future use of the borehole, e.g. piezometer installation or groundwater sampling.

The orientation and inclination of boreholes are to be specified including the maximum acceptable deviation, taking into account the expected investigation targets and the expected ground conditions into account.

NOTE: For vertical boreholes drilled down to a depth of less than 30 m, borehole vertical deviation of less than 3 degrees is normally achievable.

Table 9-2- Sampling by drilling in soils

Column	1	2	3	4	5	6	7	8	9	10	11	Column
Line	Drilling method				Equipment		Application and limitations [d]		Sampling categories [e]	Achiev-able quality class [e]	Remarks	Line
	Soil cutting technique [b]	Use of flushing medium	Extraction of sample by	Designation	Tool	Borehole diameter range [a] mm	Unsuitable for [a, d]	Preferred method for [a, d]				
1	Rotary drilling	No	Drilling tool	Rotary dry core drilling [c]	Single-tube corebarrel	100 to 200	coarse gravel, cobbles, boulders	clay, silt, fine sand, silt	B (A)	4 (2-3)	Good interior, outside dried out	1
					Hollow stem auger	100 to 300		clay, silt, sand, organic soils	B (A)	3 (1-2)	–	
2		Yes	Drilling tool	Rotary core drilling	Single tube corebarrel	100 to 200	non-cohesive soils	clay, clayey and cemented composite soils, boulders	B (A)	4 (2-3)	–	2
					Double-tube corebarrel				B (A)	3 (1-2)		
					Triple-tube corebarrel				A	1		
3		Yes	Drilling tool	Rotary core drilling	Double/triple-tube corebarrel with extended inner tube	100 to 200	gravel, cobbles, boulders	clay, silt	A	2 (1)	–	3
4		No	Drilling tool	Auger drilling	Drill rods with shell or flight auger; hollow stem auger	100 to 2000	boulders larger than $D_e/3$	all soils above water table, all cohesive soils below water table	B	4 (3)	Maximum length of auger: ≤ 0,5 m	4
5		Yes	Reverse flow of flushing medium	Reverse circulation drilling	Drill rods with hollow chisel	150 to 300	–	all soils	C (B)	5 (4)	–	5
6		No	Drilling tool	Auger drilling with light equipment	Shell auger or spiral flight auger	40 to 80	coarse gravel with a particle size larger than $D_e/3$ and dense soils and not for cohesion-less soils beneath groundwater surface	clay to medium gravel above water table; cohesive soils below water table	C [f]	5	Only to be used for small depths	6
7	Hammer driving	No	Drilling tool	Percussive core drilling	Percussion clay cutter with cutting edge inside; also with sleeve (or hollow stem auger) [b]	80 to 200	soils with a particle size larger than $D_e/3$ laminated soil, e.g. varve	clay, silt and soils with a particle size up to $D_e/3$	cohesive soil: A	2 (1)	Plotting of driving chart on the basis of number of impacts	7
									non-cohesive soil: B (A)	3 (2)		
8		No	Drilling tool	Percussive drilling	Percussive clay cutter with cutting edge outside [b]	150 to 300	soils with a particle size larger than $D_e/3$	gravel and soils with a particle size up to $D_e/3$	B	4		8
9		No	Drilling tool	Small diameter hammer driving	Hammer driving linkage with tube sampler	30 to 80	soils with a particle size larger than $D_e/2$	soils with a particle size up to $D_e/5$	C [f]	5	Only to be used for small depths	9
10	Rotary hammer driving	Yes	Drilling tool	Rotary percussive drilling	Single- or double-tube corebarrel	100 to 200	composite and pure sands with a particle size larger than 2,0 mm, gravel, firm and stiff clays	clay, silt, fine sand	cohesive soil: A	2 (1)	–	10
									non-cohesive soil: B	4 (3)		
11	Percussion	No	Drilling tool	Cable percussion drilling	Cable with percussion shell auger	150 to 500	gravel above water table, silt, sand and gravel below water table	clay and silt above water table, clay below water table	C (B)	4 (3)	–	11
12		No	Drilling tool	Light cable percussion drilling	Cable with valve auger	100 to 1000	recovery above water table	gravel and sand in water	C (B)	5 (4)	Can also be used in cohesive soils if water is added	12
13	Pneumatic/ continuous thrust	No	Drilling tool	Small diameter pneumatic/ continuous thrust drilling	Pneumatic/ continuous thrust linkage, with tube sampler	30 to 80	dense and coarse-grained soils	clay, silt, fine sand	C [f]	5	Only to be used for small depths	13
14	Grabbing	No	Drilling tool	Grab drilling	Cable with grab	400 to 1500	firm, cohesive soils, boulders of size larger than $D_e/2$	gravel, boulders of size less than $D_e/2$, cobbles	above water surface: B	4	–	14
									below water surface: C	5		

[a] Guideline values.

[b] Using the hammer driving technique the drilling tool will be driven by a special driving tool. Using the percussion technique the drilling tool will be driven by its repetitive lifting and falling.

[c] Rotary core drilling is commonly used if the observation of the groundwater surface is the most important aim of the ground investigation

[d] D_e is the internal diameter of the sampling tool.

[e] The sampling categories and intended quality classes given in brackets can only be achieved in particularly favourable ground conditions, which shall be explained in such cases.

[f] Sampling category B is sometimes possible in light cohesive soils.

NOTE Straight flush drilling is not covered because the sample quality class that can be achieved are mostly worse than 5.

9.4.3 Sampling by rotary drilling

9.4.3.1 Sampling by rotary dry core drilling – Simple sampler

In sampling by rotary dry core drilling, a tube system fitted with a drilling crown at is lower end is rotated and fed into the soil by the drill rig, via the drill string. This action produces a core sample within the tube system. The sampling tool can be single tube with a preferred borehole diameter of 100 mm to 200 mm or a hollow stem auger with a preferred borehole diameter of 100 mm to 300 mm. No flushing medium is used, not even for tube or drill string lubrication against the borehole walls. The maximum length of the coring tube should not exceed 1.5m in such cases.

The single tube core barrel consists of a core tube with a bit at its lower end and a core barrel head that attaches to the drill rods at its upper end. A core lifter may be fitted between the bit and the core tube or directly within the bit.

This technique is used for clay, silt and fine sand. If a hollow stem auger is used as a sampling tool, it will also be suitable for medium and coarse sand as well as organic soils. Sampling by rotary core drilling is generally unsuitable for sampling coarse gravel, cobbles and boulders.

Coring by simple sampler in clay often results in the length of clay core retrieved being greater than the total length drilled, due to distortion of the clay at constant volume. The additional length of core should not be discarded, but should be stored in separate boxes, clearly marked with the respective elevation or depth over which the additional core was retrieved.

9.4.3.2 Sampling by rotary core drilling – Double core sampler

When sampling using a double core sampler, a double-tube system fitted with a bit at is lower end is rotated and fed into the soil by the drill rig via the drill string. The sampling tool can be a double tube or triple tube. The preferred borehole diameter is between 100 mm and 200mm. Flushing medium, generally water, is used.

The double tube core barrel consists of two concentric tubes and a bearing arrangement in the core barrel head which allows the inner tube to remain stationary whilst the outer tube is rotated by the drill string. A core lifter is generally fitted between the core bit and the inner tube. The flushing medium passes through the annulus between the inner and outer tubes thus protecting the recovered core sample from damage. The double tube core barrel may be fitted with an optional additional plastic lining tube within the inner tube. When such a liner is fitted the standard core bit and core lifter shall be replaced by a core bit and core lifter with a reduced inner gauge. The fitting of such a clear plastic liner will assist in improving core recovery in certain formations and contain and protect the sample during transport. The double tube core barrel may also be fitted with an extension to the inner tube that passes through and protrudes just ahead of the core bit for use in soft formations.

The triple tube core barrel is similar in construction to the double tube design but is fitted with an additional third tube within the inner tube as standard. This third tube is generally a thin wall steel tube split in half longitudinally so that when it is removed from the inner tube the top half may be removed to view the core sample. In some cases the split inner tube may be replaced by a clear plastic liner. The triple tube core barrel may also be fitted with an extension to the inner tube that passes through and protrudes just ahead of the core bit for use in very soft formations.

Sampling by rotary core drilling is generally suitable for weak and strong rock, but should only be used for clay if the sampler is equipped with a protruding extension on the inner tube, that prevents the flushing medium from coming into direct contact with clay. Weak soils and boulders may be recovered using this type of sampler, but it is generally unsuitable for non-cohesive soils as the finer material is generally washed away by the flushing medium.

After recovery of the core barrel to the surface, the recovered core shall be handled in such a way that

it as far as possible maintains its natural state. Extraction shall be made horizontally with a suitable extruder and in the same direction as it entered the barrel. The recovered core should be immediately transferred into a concave tray placed immediately in from of the sampler, and then transferred directly from this tray to the core box, in the correct length of segment to match the length of the core box.

9.4.3.3 Sampling by small diameter drilling

Small diameter drilling refers to all drilling having a bore diameter between 30 mm and 80 mm. In principle the same drilling methods and equipment described in Table 9-2 can be used.

Sampling by small diameter drilling is only suitable in masonry, rock and fine grained cohesive soils. When employing small diameter drilling methods, it should be noted that the samples recovered are sufficient in size and mass, related to the scheduled laboratory testing.

Generally, the quality of a core sample obtained by small diameter drilling is lower than if larger diameter drilling for the same drilling method is used.

9.4.4 Sampling using push-in samplers

Push-in sampling may be used in combination with many drilling methods. The drilling diameter shall be chosen very carefully, so that the sampler may be lowered to the borehole bottom without hindrance.

Depending on the ground conditions, different samplers may be used (see Table 9-5). Usually sampling with samplers is used in combination with any drilling methods using drilling mud or a casing to support the borehole. The drilling method and technique shall be chosen in such a way that unacceptable disturbance of the soil samples is prevented.

The inside of the sampling tube or the liner shall be clean and smooth without any protruding edges or irregularities, which may cause disturbance of the sample.

Drilling of the casing with percussion is not allowed to the full depth in case of category A sampling. The percussion process shall be halted at least 0.25 m or 5 times the diameter of the borehole before reaching the sampling depth.

If a casing is used in sensitive clays, it may not be brought closer than 2.5 times the outside diameter of the casing to the sampling depth to minimise disturbance. In other soils, the casing can be lowered to the borehole bottom. Samples shall be taken from the undisturbed soil below the casing in a pre-cased or slurry supported borehole, slightly larger than the diameter of the sampler.

When drilling mud is used, its characteristics shall be chosen with respect to the drilling method, the ground and groundwater conditions to obtain a stable borehole.

Before taking undisturbed samples from the borehole bottom, any loose or disturbed material shall be removed. In case of cleaning the borehole bottom by circulating flushing medium the rotary drill bit shall be advanced with utmost caution and the fluid circulation reduced until the bit reaches the sampling depth. Remaining loose material shall be removed in a controlled manner.

Table 9-3- Soil sampling using samplers

Column	1	2	3	4	5	6	7	8
Line	Type of sampler [a]	Preferred sample dimensions		Technique used	Applications and limitations		Sampling category for soils as in column 6 [a]	Achievable quality class [a]
		Diameter mm	Length mm		Unsuitable for	Recommended for use in		
1	thin-walled (OS-T/W)	70 to 120	250 to 1000	static or dynamic driving	gravel, loose sand below water table, firm cohesive soils, soils including coarse particles	cohesive or organic soils of soft or stiff consistency	A	1
						(medium) dense sand below water table	B (A)	3 (2)
						cohesive or organic soils of stiff consistency	A	2 (1)
2	thick-walled (OS-TK/W)	>100	250 to 1000	dynamic driving	gravel, sand below water table, pasty and firm cohesive or organic soils, soils including coarse particles	cohesive or organic soils of soft to stiff consistency, and including coarse particles	B (A)	3 (2)
3	thin-walled (PS-T/W)	50 to 100	600 to 800	static driving	gravel, very loose and dense sands, semi-firm and firm cohesive or organic soils, soils including coarse particles	cohesive or organic soils of pasty or stiff consistency, and sensitive soils	A	1
						sand above ground water	B	3
4	thick-walled (PS-TK/W)	50 to 100	600 to 1000	static driving	gravel, sand below water table, pasty and firm cohesive or organic soils, soils including coarse particles	cohesive or organic soils of soft to stiff consistency, and sensitive soils	B (A)	2 (1)
5	cylinder (LS)	250	350	static rotating	sand	clay, silt	A	1
6	cylinder (S-SPT)	35	450	dynamic driving	coarse gravel, blocks	sand, silt, clays	B	4
7	window	44 to 98	1500 or 3000	static or dynamic driving	sand, gravel	silt, clay	C	5

[a] The sampling categories and achievable quality classes given in brackets can only be achieved in particularly favourable ground conditions, which shall be explained in such cases.

9.4.4.1 Sampling using the open-tube sampler and the piston sampler

For recovering samples from boreholes in cohesive, sandy and organic soils, open-tube or piston samplers may be used. These samplers generally consist of a thin-walled sampling tube with or without a piston and a sampler head with a connection to the extension rods. The open-tube and piston samplers (thin-walled and thick- walled) can be used either in boreholes (both) or be pushed directly into the soil (piston).

1.2.1.1.1 General geometry

Tube inner diameters between 50 mm and 120 mm are common, but diameters up to 250 mm are used for special soil conditions. The lower end of the tube shall be shaped to form a cutting edge.

The sampling tube length should preferably be not greater than 20 times the sample diameter. An effective sampling length of 0.45 m to 1.00 m is considered sufficient for ordinary soil testing, but lengths greater than 500mm may not be achievable in stiff overconsolidated clays unless considerable force is employed. Longer tubes may be used if friction reducing systems are applied, but long tubes may bckle under the load applied to push the sampler into the soil.

1.2.1.1.2 Detailed geometry

The material of the sampling tube shall be rigid, resistant to corrosion and with a smooth surface. The thickness of the tube wall shall be chosen so that the tube resists distortion when pushed into the soil.

The thin-walled tube samplers used shall meet the following requirements, which apply by analogy to samplers with other internal diameters:

The edge taper angle should be between 5° and 15°. Sharper values should be used for high area ratios; the area ratio, C_a (see Figure 6-1), should be less than 15% or;

if the taper angle is less than 5º and the thickness of the cutting edge is less than 0.3 mm, the area ratio can be between 15% and 25%; for tube samplers with C_a exceeding 15%, the angle of the cutting edge shall decrease as the wall thickness increases.

The tolerances on the cutting edge and the sample tube should be chosen to give a minimum inside clearance ratio C_i (see Figure 6-1) less than 0.5%. When assessing the inside clearance the worst case of manufacturing tolerances shall be applied.

1.2.1.1.3 Preparation of tubes

Prior to sampling, the sampler and the tubes should be carefully inspected and overhauled and defective or deformed parts should be replaced. Special care should be given to gadgets, locking devices and the cutting edge. In order to keep the sample as undisturbed as possible during extraction, transport and handling in the laboratory samplers with rigid, low friction liners are recommended.

The inside of the sampling tube or liner should be clean and smooth without any protruding edges or irregularities, which may cause disturbance of the sample. The tubes and liners shall have smooth walls to minimise friction in the soil. Tubes that are corroded internally, or have damaged cutting edge, shall not be used.

1.2.1.1.4 Field procedure

The sampler shall be pushed statically into the ground (see column 4 of Table 9-4). If dynamic driving is used, the drop weight used shall impinge directly onto the sampler head, its mass being sufficient to effect the required penetration of the tube by a few blows from a small height.

The sampler tube shall be pushed down to at least 300 mm below any disturbed material at or below the base of the borehole. Before sampling from the bottom of the borehole, any loose or disturbed material shall be removed. The sampler should be carefully lowered into a borehole as soon as practicable after the hole has been cleaned. If casing is used, samples shall be taken from the

undisturbed soil below the casing.

The depth of the borehole and the position of the sampler shall be checked exactly when the sampler enters the borehole. The sampler shall not bear upon the soil at the bottom when the sampler reaches its full depth. The sampler advance should be made in one continuous motion to the predetermined depth, and the length of advance should be measured. This length shall be assessed for each type of sampler. It is preferred to use not more than 90% of the effective length. Advance in excess of the effective length is not allowed.

After driving, the sample shall be sheared off at the bottom edge of the sampler tube by rotating the drilling string or by slowly raising the sampler. The sampler should be carefully withdrawn without any vibrations or shocks in order to keep the sample undisturbed. It is often advisable to keep the sampler in position for a few minutes so that sufficient adhesion is developed between the sample and the sampling tube or liner.

After withdrawal, the sampler should be disassembled and if necessary, the samples carefully extracted without any bending or torsion of the sample. The sampling tube and the cutting edge should be checked for any deformations. Any such deformations should be noted in the record. The occurrence of loosened soils or cuttings in the upper end shall also be checked and noted in the record.

The sampling process may disturb the soil underneath the sampler. This influence shall be considered.

1.2.1.1.5 Sampling using the open-tube sampler

In addition to the components above mentioned, open-tube samplers (OS) consist of a sampler tube with overdrive space and a sampler head with a non-return valve tube. The sludge tube shall provide an overdrive space into which the softened material in the borehole can pass. The non-return valve ball and seat shall be adequately sized so as to permit escape of contained water and air when the sample enters the tube and close tightly when the sampler is being withdrawn (see Figure 9-1 and Table 9-3). At its upper end, the sample tube is provided with inserts or with a thread for connection to the sludge tube.

When the open-tube sampler is extracted from the ground, and it contains a soil sample, the exposed ends of the sample are to be sealed immediately on extraction using molten paraffin wax. The tube is then to be labelled with the following information:

(a) The site location

(b) The borehole number or name from which the sample was extracted

(c) The depth at which the sample was taken, relative to top of borehole

(d) The date of extraction

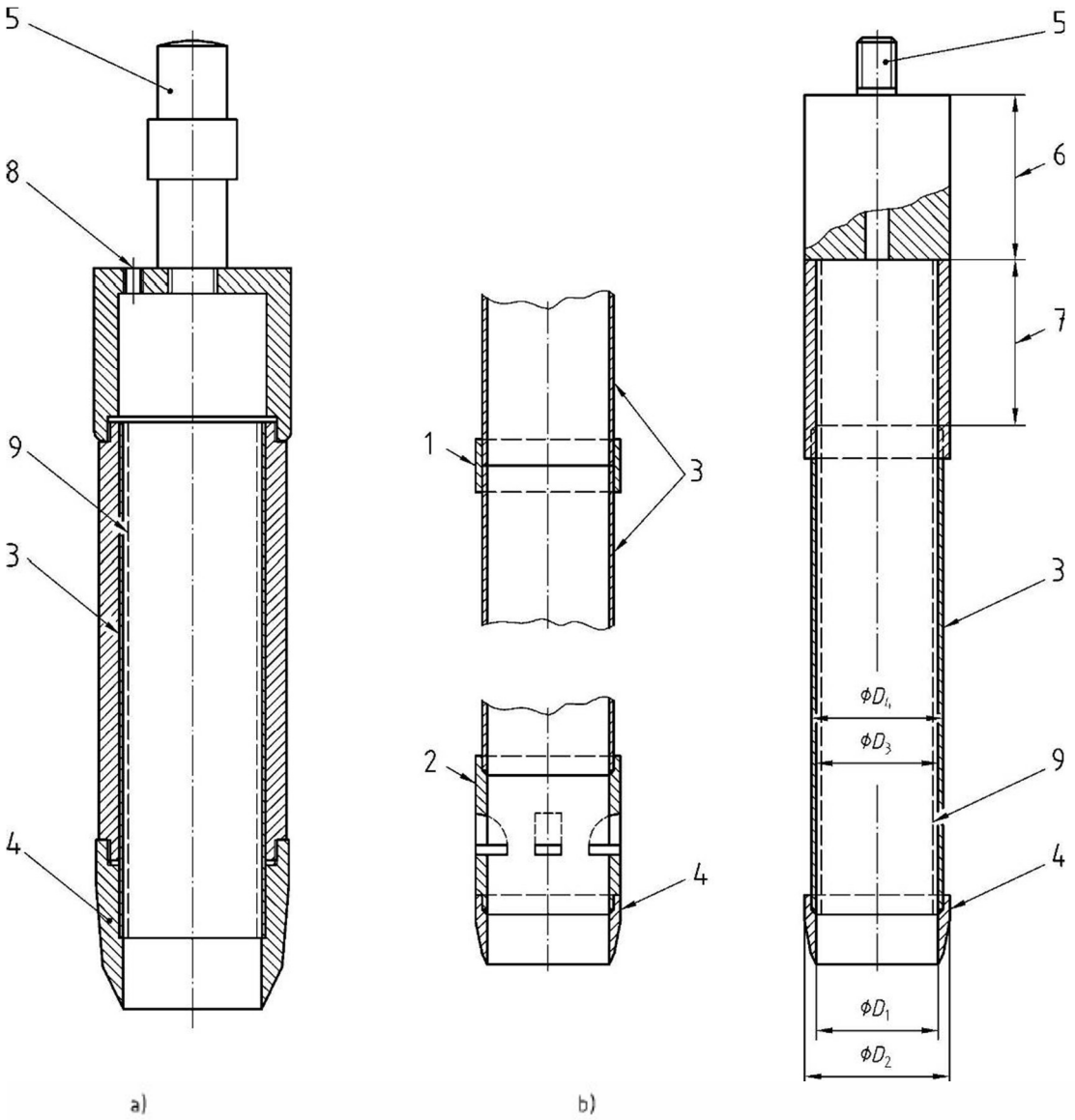

a) Thick-walled open-tube sampler

b) Thin-walled open-tube sampler

Key

D_1 inside diameter of the cutting shoe
D_2 greatest outside diameter of the cutting shoe
D_3 inside diameter of the sample tube or liner
D_4 outside diameter of the sample tube
1 screw socket
2 sample retainer
3 sample tube
4 cutting shoe
5 connection to drilling rods or sliding hammer
6 non-return valve
7 overdrive space
8 valve
9 liner (optional)

Figure 9-1- Examples of open-tube sampler for recovering samples from boreholes (OS)

Sampling using the thin-walled open-tube sampler is usually regarded as category A or B sampling method depending on the ground conditions (see Table 9-3).

Thick-walled open-tube samplers (OS-TK/W) shall not be used.

Using the thick-walled open-tube sampler is usually used as a category B sampling method.

9.4.4.2 Sampling using the piston sampler

The piston sampler can be used in low strength fine soils like silt and clay, including sensitive clays. The method can be used either in boreholes or be pushed directly into the soil.

The piston sampler consists of a sample tube containing a close-fitting sliding piston, which is slightly coned at its lower face. The sample tube is fitted to the sampler head, whereas the piston is fixed to separate rods. This passes through a sliding joint in the sampler head and up inside the drill rods. Clamping devices, operated at ground level, enable the piston and sample tube to be locked together or the piston to be held stationary while the sample tube is driven down (see Figure 9-2). When shearing the sample, the piston shall be released or firmly fixed to the ground surface before further advance of the sampler is made. Movement of 1% of the length of penetration in the piston rod due to tension is acceptable.

Sampling using the piston sampler is usually regarded as a category A sampling method (see Table 9-3). In certain circumstances, the piston sampler may be used in sands by use of an appropriate core lifter. The sampling category in this case is usually regarded as a category B sampling method. For sampling in clay, a core lifter shall be avoided due to risk of disturbance. If used, it shall be noted in the sampling record.

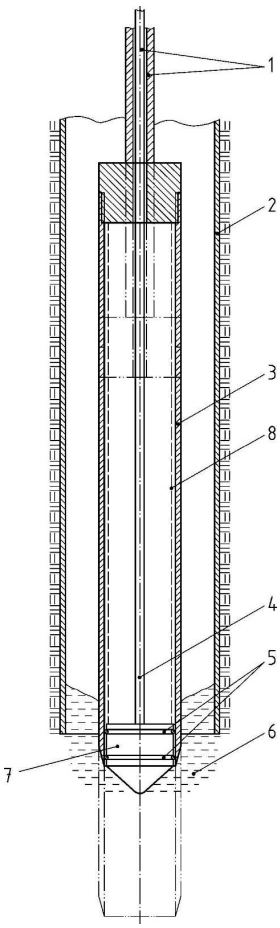

Key

1 drill rod locking device above ground
2 casing
3 sample tube
4 vent
5 sealing ring
6 drilling mud
7 piston
8 liner (optional)

Figure 9-2-Thin-walled stationary piston sampler for sampling from borehole bottom (PS)

9.4.4.3 Sampling using the standard penetration test sampler

The standard penetration test sampler is mostly used in the standard penetration test according to prEN ISO 22476-3. It takes samples 35 mm in diameter, 450 mm in length and has an area ratio C_a of about 100%.

The sampling using the standard penetration test sampler is usually used as category C sampling

method (see Table 9-3). In certain homogenous fine grained soils it may also be used as a category B sampling method.

9.4.5 Block sampling

9.4.5.1 Sampling from trial pits

In sampling from a trial pit (S-TP), samplers with cutting procedure are used or block samples are recovered. Block samples in cohesive soils can be cut by hand or by a handheld saw. Block samples in weak rock/hard soil may be cut by chainsaw. The following precautions shall be taken:

In soils with adequate cohesion, samples may be cut out by hand. Sampling from trial pits executed in this way is usually considered as category A or B.

In sampling from trial pits, samples are removed from the bottom, any slopes or walls of a trial pit. In sampling dense sands, there is the possibility of losing sample material during extraction of the sampler tube. Such material shall be included in the sample to complete the sample.

Block samples measuring 250mm x 250mm x 250mm are to be taken from trial pits, at the levels specified by the Engineer, and after consultation with the Engineer. These are to be excavated by hand tools only.

The block sample is to be isolated from the parent soil by deep vertical cuts extending beyond the required thickness (250mm), using a hand-held tools, a chainsaw or equivalent, depending on the strength of the ground material. Isolation by pneumatic hammer, electric vibratory hammers or by bucket excavator will not be allowed, as this would compromise the undisturbed samples.

The material around the four sides of the chosen sample is then to be removed using hand tools, and at this point the block, still attached at the base to the ground, is labelled to indicate the top face and the orientation of the four sides. It is then covered in plastic film and then paraffin wax. Three such layers of film and wax are required at this point, ensuring that the top and sides are covered and completely sealed.

After this is completed, the block will then be cut or sawn off the base, from all four sides, until it is supported only on a small central section. The block is then prised free by shearing this remaining connection, after which the bottom face is smoothened with a sharp knife and immediately covered in plastic film and wax, ensuring continuity with the covering on the other five sides. At this point, any damage to the covering on the other five sides is to be made good by applying further layers of plastic film and wax.

The block sample is then to be stored in a wooden crate, packed with moist sawdust and appropriately covered with a wooden lid. The crate is to be labelled with the site location, the trial pit number, compass orientation on the top face, the depth of sampling and the date of sampling. The crate is to have side handles (rope handles or equivalent) to enable easy transportation.

Three soil specimens having a mass between 20g and 100g are to be taken from the exposed faces of the pit before, during and after block sample extraction. These specimens are to be place in airtight containers, then weighed, and placed in the appropriate containers for water content determination, after a period of not less than 24 hours in an oven at 105°C.

Table 9-4 - Examples on sampling methods with respect to the sampling category in different soils

Soil type	Suitability depends on e.g.	Sampling method		
		Category A	Category B	Category C
Clay	Stiffness or strength sensitivity plasticity	PS-PU OS-T/W-PU[b] OS-T/W-PE[a] OS-TK/W-PE[a, b] CS-DT, CS-TT S-TP, S-BB	OS-T/W-PE OS-TK/W-PE CS-ST HSAS AS[a]	AS
Silt	Stiffness or strength sensitivity groundwater table	PS OS-T/W-PU[b] OS-TK/W-PE[a, b] S-TP	CS-DT, CS-TT OS-TK/W-PE HSAS	AS CS-ST
Sand	sizes of the particles density groundwater table	S-TP OS-T/W-PU[b]	OS-TK/W-PE[b] CS-DT, CS-TT HSAS	AS CS-ST
Gravel	size of the particles density groundwater table	S-TP	OS-TK/W-PE[a, b] HSAS	AS CS-ST
Organic soil	state of decay	PS OS-T/W-PU[b] S-TP	CS-ST HSAS AS[a]	AS

[a] can be used only on favourable conditions

[b] see also 7.2.4.3.3 for the detailed geometry (BE)

Key

OS-T/W-PU	open-tube samplers, thin-walled/pushed	CS-ST	rotary core drilling, single tube
OS-T/W-PE	open-tube samplers, thin-walled/percussion	CS-DT, CS-TT	rotary core drilling, double or triple tube
OS-TK/W-PE	open-tube samplers, thick-walled/percussion	AS	augering
PS	Piston samplers	HSAS	hollow stem augering
		S-TP	samples from trial pit
		S-BB	sample from borehole bottom

9.5 Rock sampling methods

9.5.1 General

Techniques for obtaining rock samples can be divided in the following groups:

(a) sampling by drilling (Table 9-5)

(b) block sampling;

Combinations of these sampling methods are possible and sometimes required due to diverse geological conditions.

Rock samples are of the following types:

(a) cores (complete and incomplete);

(b) cuttings and retained returns;

(c) block samples.

The quality of the rock recovery is assessed using the following three parameters (see also Figure 6-2):

(a) total core recovery, TCR;

(b) rock quality designation, RQD;

(c) solid core recovery, SCR.

After recovery of the core barrels to the surface, the total core recovery shall be assessed. In case where core samples are extruded from the core barrel and placed in a core box, the retrieved core shall be logged in the shortest time possible. The Engineer may request the recovered core to be wrapped in plastic cling film at this stage, to protect the moisture condition of the rock. The individual core pieces shall be wrapped in plastic film, and not the entire core box as one whole.

If liners are used, agreement with the Engineer is to be sought as to where and when the liners shall be opened for examination of the core. Core losses shall be filled with a dummy marker, such that isolated pieces of core are not dislodged from their position during transportation.

9.5.2 Categories for rock sampling methods

There are three categories of rock sampling methods depending on the best obtainable quality of rock samples under given ground conditions:

(a) category A sampling methods;

(b) category B sampling methods;

(c) category C sampling methods.

Using category A sampling methods, it is possible to obtain samples in which no or only slight disturbance of the rock structure has occurred during the sampling procedure. The strength and deformation properties, water content, density, porosity and the permeability of the rock sample correspond to the in-situ values. No change in constituents or in chemical composition of the rock mass has occurred. Certain unforeseen circumstances such as variations in the geological strata may result in lower sample quality being obtained.

By using category B sampling methods it is possible to obtain samples that contain all the constituents of the in-situ rock mass in their original proportions, and the rock pieces have retained their strength and deformation properties, water content, density and porosity. By using category B sampling, the general arrangement of discontinuities in the rock mass may be identified. The structure of the rock mass has been disturbed and thereby the strength and deformation properties, water content, density, porosity and permeability for the rock mass itself. Certain unforeseen circumstances such as variations in the geological strata may result in lower sample quality being obtained.

By using category C sampling methods the structure of the rock mass and its discontinuities has been totally changed. The rock material may have been crushed. Some changes in constituents or in chemical composition of the rock material may occur. The rock type and its matrix, texture and fabric may be identified.

Table 9-5 Sampling by rotary drilling in rock

Column	1	2	3	4	5	6	7	8	9	10
Line	Drilling method			Equipment		Drilling method less suitable for [a]	Samples		Sampling category [b]	Remark
	flushing medium	Extraction of sample by	Designation	Sampling tool	Usual borehole diameter range [a]		Cores [a]	Cuttings		
1	Yes	Drilling tool attached to drill rods	Rotary core drilling	Single-tube corebarrel	70 to 200	Rock of medium to high hardness	Jointed, soft rock	Sieve residue and suspended matter	B (C)	Flushing medium may cause disturbance of core material
2	No	Drilling tool attached to drill rods	Rotary dry core drilling	Single-tube corebarrel	70 to 200	Rock of medium to high hardness	Soft, erosive, water-sensitive rock; short core runs	None	B (C)	To prevent overheating of the bit, core runs should not exceed 0,5 m.
3	Yes	Drilling tool attached to drill rods	Rotary core drilling	Double-tube corebarrel	70 to 200	Erosive, water-sensitive rock	All types of rock	Sieve residue and suspended matter	A (B)	–
4	Yes	Drilling tool attached to drill rods	Rotary core drilling	Triple-tube corebarrel	70 to 200	–	All types of rock	Sieve residue and suspended matter	A	–
5	Yes	Drilling tool attached to drill rods, with wireline extractable inner barrel	Wireline core drilling	Wireline corebarrel, or triple-tube corebarrel	70 to 180	–	All types of rock	Sieve residue and suspended matter	A	–
6	Yes	Drilling tool attached to drill rods	Open hole drilling	Solid bit, roller bit, DTTH	50 to 350	–	None	Sieve residue and suspended matter	C	–

[a] Guideline values considering the possible use of a casing.

[b] The sampling categories given in brackets can only be achieved in particularly favourable or unfavourable ground conditions, which shall be explained in such cases.

DTTH Down-the-hole-hammer

NOTE The sample diameter is smaller for the same borehole diameter when a triple tube corebarrel is used, instead of a single tube corebarrel.

9.5.3 Sampling by drilling

Drilling methods and equipment shall be selected as a function of the required sampling category (see Table 9-5) geological and hydrogeological conditions.

The flushing medium should be selected to meet the requirement of the investigation and if necessary appropriate additives may be added to this medium. Hydrogeological requirements shall be considered when selecting the flushing medium.

In soft or weak rocks only double or triple core barrels shall be used. The bit type shall be selected to ensure efficient coring of the rock type.

Cementing may be necessary to stabilise the borehole or to sample the rock, when a heavily fractured rock zone is encountered.

The orientation and inclination of boreholes shall be specified by the Engineer, including the maximum acceptable deviation, taking the expected investigation targets and ground conditions into account.

9.5.3.1 Sampling by rotary core drilling – Dry process

In sampling by rotary dry core drilling, a tube system is fitted with a coring crown at its lower end and is rotated and fed into the ground by the drill rig via the drill string. This action produces a core sample within the tube system. The sampling tool is a single tube with a borehole diameter of 70 to 200mm. This sampling technique may be used to recover core samples in soft, erosive, water sensitive rock, without the use of water as a flushing medium, in short runs not exceeding 0.5m

Sampling by rotary dry core drilling is a category B sampling method (see Table 9-5).

9.5.3.2 Sampling by rotary core drilling - Wet process

In wet sampling by rotary core drilling, a tube system fitted with a bit at its lower end is rotated and fed into the rock mass by the drill rig via the drill string. A flushing medium (generally water unless otherwise stated) is used to facilitate the drilling process and to transport the cuttings at the crown to the surface This action produces a core sample within the tube system. The sampling tool i.e. the core barrel, can be single tube, double tube or triple tube, with a borehole diameter of 70 to 200 mm.

A single tube core barrel consists of a core tube fitted with a bit at its lower end and a core barrel head that attaches to the drill rods at its upper end. A core lifter may be fitted between the bit and the core tube or directly within the bit. The flushing medium passes between the inside diameter of the core tube and the recovered rock core and continuously washes the length of the recovered sample.

A double tube core barrel consists of two concentric tubes and a bearing arrangement in the core barrel head which allows the inner tube to remain stationary whilst the outer end bit is rotated by the drill string. A core lifter is fitted between the bit and the inner tube. The flushing medium passes through the annulus, between the inner and outer tubes thus protecting the recovered sample from erosion.

A triple tube core barrel is similar in construction to the double tube design, but is fitted with an additional third liner tube within the inner tube

Both double tube and triple tube core barrels may be fitted with extensions to their inner tubes, that protrude beyond the cutting crown, for use in very soft formations.

Samples can be obtained by this method as cylindrical prismatic cores. The single tube core barrel only allows core recovery in consolidated formations whereas double tube and triple tube can be used in all rock formations. All these types of core barrels may be fitted with clear plastic liners within the inner tube to assist core recovery and protect the recovered core sample.

Sampling by rotary core drilling, with either single or double, is generally a category B sampling method. The sampling method using a triple tube core barrel is generally category A (see Table 9-5).

9.5.3.3 Sampling by wireline core drilling

In sampling by wireline core drilling, a double tube or triple tube core barrel, with a bit fitted to the lower end, is rotated and fed into the formation to be drilled by the drill rig via the wireline drill rods. This action produces a core sample within the inner tube of the core barrel. The borehole diameter range is from 60 to 150 mm. When the coring run is completed, the inner tube containing the core sample is withdrawn through the drill rods by means of a wireline cable and winch. The bit, outer tube and drill rods, remain in the borehole during this process.

Sampling by wireline core drilling is a category A sampling method.

9.5.4 Block sampling

In block sampling, samples are obtained from a trial pit, head, shaft or from the bottom of a borehole by using special samplers with cutting procedure.

This sampling technique is usually a category A sampling method. Block samples in weak rock/hard soil may be cut by chainsaw. The following precautions shall be taken:

In sampling from trial pits, samples are removed from the bottom, any slopes or walls of a trial pit. Block samples measuring 250mm x 250mm x 250mm are to be taken from trial pits, at the levels specified by the Engineer, and after consultation with the Engineer. Discontinuities should be avoided as much as possible when choosing the sampling location.

The block sample is to be isolated from the parent soil by deep vertical cuts extending beyond the required thickness (250mm), using a hand-held tools, a chainsaw or equivalent, depending on the strength of the ground material. Isolation by pneumatic hammer, electric vibratory hammers or by bucket excavator will not be allowed at a distance of less than 200mm from the final intended profile of the block sample, as this would compromise the undisturbed samples.

The material around the four sides, and in the vicinity of the chosen sample is then to be removed using hand tools, and at this point the block, still attached at the base to the ground, is labelled to indicate the top face and the orientation of the four sides. It is then covered in plastic film and then paraffin wax. Three such layers of film and wax are required at this point, ensuring that the top and sides are covered and completely sealed.

After this is completed, the block will then be cut or sawn off the base, from all four sides, until it is supported only on a small central section. The block is then prised free by shearing this remaining connection, after which the bottom face is smoothened with a sharp knife and immediately covered in plastic film and wax, ensuring continuity with the covering on the other five sides. At this point, any damage to the covering is to be made good by applying further layers of plastic film and wax.

The block sample is then to be stored in a wooden crate, packed with moist sawdust and appropriately covered with a wooden lid. The crate is to be labelled with the site location, the trial pit number, compass orientation on the top face, the depth of sampling and the date of sampling. The crate is to have side handles (rope handles or equivalent) to enable easy transportation.

Three rock specimens having a mass between 50g and 100g are to be taken from the exposed faces of the pit before, during and after block sample extraction. These specimens are to be place in airtight containers, then weighed, and placed in the appropriate containers for water content determination, after a period of not less than 24 hours in an oven at 105°C.

9.6 Handling, transport and storage of samples

9.6.1 General

Handling is considered to start when the sample is extruded out of the sampling tool, or when it is separated from the ground in the case of block samples.

The condition of soil and rock samples, evident immediately after extraction form the sampling tool, shall be recorded.

National laws or regulations shall be considered when transporting samples known or suspected to contain hazardous material.

A separate traceability record shall accompany each consignment so that the possession of the sample is traceable from collection, to delivery at the laboratory.

When transferring the possession of samples the persons(s) relinquishing and receiving the samples shall sign, date, record the time, and check the traceability record.

Every soil and rock sample shall be protected at any time from direct sun light, heat, frost and rain.

9.6.2 Preservation materials and sample containers

The type of preservation materials and sample containers depend on the sampling categories A, B, and C and on the climate and transporting mode and distance:

(a) Sealing wax e. g. microcrystalline/paraffin wax or combinations thereof;

(b) metal or plastic discs, ca 2 mm thick and having a diameter slightly less than the inside diameter of the tube liner or ring and to be used in union with wax or caps and tape or tube;

(c) water proof duct tape;

(d) caps, either plastic, rubber or metal, to be placed over the end of thin-walled tubes in union with tape or wax;

(e) O-ring (sealing and caps) used to seal the ends of samples within walled tubes by mechanically expanding on O-ring against the tube wall;

(f) jars with a lid, e. g. 250 ml, 500 ml and 1000 ml;

(g) plastic pails;

(h) glass jars;

(i) aluminium foil;

(j) plastic bags;

(k) packing material, to protect against vibration and shock;

(l) insulation against temperature changes, e. g. granule (lead), foam;

(m) shipping containers, either box or cylindrical type and of proper construction to protect against vibrations, shock and the elements to the degree required.

9.6.3 Handling of samples categories A and B

Plastic bags shall be placed around the sample, as tight as possible.

Lids of plastic pails and jars or glass jars containing the samples, shall be placed and secured as tight as possible. Lids of plastic pails and jars or glass jars have to be airtight. Glass jars will additionally need sealing rings for air tightness.

Sample ends within tubes shall be sealed with plastic expandable packers or by a soil filling and end caps in order to maintain the conditions for a specified period.

NOTE: For long-term sealing, microcrystalline wax up to 15 % beeswax, paraffin or resin can be used to avoid shrinkage cracks.

Cylindrical, cube or other rock samples wrapped in plastic or aluminium foil may be further protected with three coats of wax.

9.6.4 Transport of soil samples

9.6.4.1 Sampling category A

Soils sample obtained according to sampling category A shall be preserved in their liners or in containers. Samples in core boxes shall be transported horizontally.

Block and special samples without a tube shall be wrapped in suitable plastic film or/and aluminium foil and coated with several layers of wax or sealed in several layers of cheese cloth and wax.

The samples shall be protected against vibration, shocks and extreme temperatures. Samples shall only be placed in solid boxes into which the samples fit snugly to prevent bumping, rolling, dropping, etc.

For all other methods of transporting samples the sealed samples shall be placed in suitable shipping containers that provide cushioning or/and insulation for the sample or container.

The cushioning material (sawdust, rubber, polystyrene, urethane foam, or material with similar resiliency) shall completely encase the samples in such a way that they are not disturbed during transport.

NOTE: The cushioning between the samples and walls of the shipping containers can satisfactory having a minimum thickness of 25 mm. A minimum thickness of 50 mm can be provided on the container floor.

The shipping container may be made from wood, metal, plastic or styrene and shall meet the requirements for the correct transportation of the sample.

9.6.4.2 Sampling category B

Soil samples obtained according sampling category B shall be preserved and transported in sealed moisture protected container. All containers shall be sufficient thickness and strength to ensure against breakage and moisture loss.

The following container types can be used:

(n) waterproof glass or plastic jars;

(o) thin walled tubes, liners or rings.

Cylindrical and cube samples shall be wrapped in suitable plastic film or/and aluminium foil and coated with several layers of wax or sealed in several layers of cheese cloth and wax.

These samples shall be transported in larger shipping containers, e. g. bags, card boxes or wooden crates by available transportation.

9.6.4.3 Sampling category C

Samples obtained according to sampling category C can be transported in any type of container by way of available transportation.

9.6.5 Transport of rock samples

A detailed log has to be completed on the drill site in cases where the sample is likely to deteriorate or otherwise change before being examined again.

9.6.5.1 Sampling category A

Rock samples obtained according to sampling category A have to be placed in solid containers individually. If samples were not obtained in tubes, they have to be immediately and completely tight wrapped with film or foil. They have to be protected against vibration, shock, heat and temperature changes. Samples shall be transported horizontally and stored in suitable shipping containers made of wood, metal or other material, that provide cushioning and/or thermal insulation for each sample and

each container. Rocks sensitive to moisture contain shall be sealed with wax or plastic cling film.

The cushioning material (sawdust, rubber, polystyrene, urethane foam, or material with similar resiliency) shall completely encase the samples in such a way that they are not disturbed during transport.

NOTE: For long term sealing microcrystalline wax up to 15 % beeswax, paraffin or resin can be used to avoid shrinkage cracks.

The shipping container may be made from wood, metal, plastic or styrene and should meet the requirements for the correct transportation of sample.

9.6.5.2 Sampling category B

Rock samples obtained according to sampling category B have to be individually placed in solid containers. If samples were not obtained in tubes, they shall immediately be completely wrapped with plastic film or foil. They have to be protected against vibration, shock, heat and cold and temperature changes. Samples shall be transported horizontally.

9.6.5.3 Sampling category C

Rock samples obtained according to sampling category C shall be placed and transported in structurally sound core boxes. They have to be placed respecting the in-situ strata and have to be coated with film or foil. They shall be transported and stored horizontally.

9.6.6 Preparation of storage and shipping containers

Core boxes shall be constructed rigidly enough to prevent flexing of the core when the box is picked up by its ends. The lid should have sturdy hinges and a strong hasp or screw closure. Nails may not be driven in the lid. A core stop block and a numbered run marker shall be placed at the ends of each core run. Unnecessary breaking of the core to fit the core box is not allowed. Any necessary breaks shall be recorded on the log. The depth of the top and bottom of the core length in the box shall be marked with a waterproof manner near the core ends and corresponding box corners. Intermediate depths that are accurately known shall also be similarly marked.

9.6.7 Storage of samples

Single samples in sample containers and core samples in core boxes shall be stored in such a way that the relevant soil and rock mechanical characteristics of these samples do not change. Samples shall be tightly sealed with plastic film or foil and unnecessary handling should be avoided. The samples shall be stored in a cool environment during hot weather. For special purposes the storage room temperature should be the same as ground temperature and moisture content 85% to 100%. If there is doubt that a sample is disturbed during storage, a remark shall be noted on the laboratory forms.

9.6.8 Labelling of samples

All samples shall be immediately numbered, documented and labelled after sampling and sealed. The label shall show the following information:

The samples shall be marked, so that there is no doubt about the upper and lower end of the sample. The label should indicate the soil and rock type, the weathering and possible discontinuities from visual identification, if possible.

(a) Identification of the project;

(b) identification of trial pit, borehole etc.;

(c) date of sampling;

(d) identification of sample;

(e) sampling category;

(f) depth of the sample from reference level;

10. Tests in boreholes or on the retrieved borehole core

10.1 Standard Penetration Test (SPT)

Standard Penetration Test (SPT) shall be carried out as per ASTM D1586-84.

The SPT Assembly shall be lowered to the base of the hole and then any penetration due to self-weight shall be recorded.

The test involves the driving of a standard sampler tool a distance of 450 mm into the bottom of a borehole using the standard weight of 63.5 kg falling through 760 mm.

During the test, the number of blows for three increments of 150 mm, or the penetration of the tool after 50 blows will be recorded as the “seating drive”. The seating drive will be terminated after 150 mm penetration or 50 blows, whichever is reached first and the test drive will be started.

After the seating drive, the number of blows required for each of three increments of 150 mm penetration will be recorded as the test drive. The test drive will be terminated after 450 mm penetration or a total of 50 blows in a step of 150 mm penetration, whichever is reached first.

If the full penetration is not obtained, then the number of blows and actual penetration for the increments will be recorded.

A small disturbed sample for the split spoon sampler will be taken, or a bulk disturbed sample of soil in the zone of the test if no split spoon sample is available.

The details of the SPT will be recorded on the borehole log. The size and depth of the casing and depth of water will be recorded.

The test can also be conducted in gravels or gravelly sand in which case the open drive shoe may be replaced by a solid 60 degree cone, but when this is used the result should be reported separately from the standard test using the open drive shoe, and with the preface SPT(C).

In the report of the boreholes the following data are reported:

(a) initial depth of the SPT test,

(b) number of blows for each of three increments of 150 mm penetration, or

(c) the penetration (< 150 mm) corresponding to 50 blows, eventually in one of 150 mm penetration, corresponding to the end of test.

(d) The level of any water encountered in the borehole

(e) The diameter of the borehole

(f) Data pertaining to the equipment used to carry out the Standard Penteration Test, to allow the necessary corrections to be made:

   i. Diameter, length and weight/m run of the drive rods connecting the sampler to the hammer, and the length of rod between anvil and the ground

   ii. Details of the hammer used to conduct the SPT test (hammer type, weight of hammer, weight of anvil, falling height of the hammer)

   iii. Energy ratio of the system used to conduct the test (%), including certificates of calibration.

   iv.

10.2 Down Hole Seismic test (DH)

The main objectives of Down Hole tests are to obtain profiles, along the entire depth of investigation, of:

(a) Longitudinal, compression, wave velocity V_p;

(b) transversal, shear wave velocity V_s;

(c) shear initial modulus G_o;

(d) Poisson modulus ν; Young initial modulus E_o;

(e) Dynamic characterization of the ground.

The above parameters are mainly depending from lithology, mineralogy, geological age, consistency, cementation, porosity, crack pattern and water content.

This DH seismic test is performed in a borehole, inside a cemented plastic pipe. The Contractor must submit the following to the Engineer, for approval, inclusive of verticality checks on the test borehole:

(a) method statements;

(b) list and characteristics of equipment, devices, hardware which is intended to be used; list of personnel: technical responsible, field and office operators; synthetic curricula; software, input/output characteristics, theoretical references;

(c) documentation about previous geophysical investigation performed

(d) inclinometer data that indicates the measured verticality of the borehole and tubes as grouted.

Waves are generated on the ground surface by means of drop falls (≈ 8 kg) on a steel or wooden plate or timber section held against ground by a suitable weight (e.g. car axle). Impulses are recorded at various depth without refraction or reflection phenomena.

Time data recorded permits to evaluate the average velocity V_p and V_s and, taking into account the differences between various depth of recording, the local V_p and V_s.

More precision is reached for little span between two geophone positions and for many (3 are recommended) different impulse positions.

The report shall consist of the following elements:

(a) name of enterprises performing the borehole, the cementation of plastic pipe;

(b) Name of enterprises performing the down hole tests;

(c) name of client or representative;

(d) date of activity;

(e) name and number of project;

(f) identification of the borehole;

(g) description of equipment used, positions and characteristics of drop falls (impulse);

(h) description of methodology and theoretical references used for the interpretation;

(i) tables with numerical results of V_p, V, G_o, ν; related to depth;

(j) graphs showing the results of V_p, V, G_o, ν; related to depth;

(k) photographs;

(l) name and signature of the person responsible for the execution and interpretation.

11. Borehole logs

A comprehensive record of all investigative activity and of the resultant findings shall be drawn for every borehole drilled during the investigation. This record should have sufficient information to transmit the experience of drilling the borehole in its entirety, as well as comprehensive descriptions of the findings and the interpretation of these in relation to the encountered stratigraphy. The borehole record or log should also contain complete references to the nature and location of tests done within the borehole, during or after drilling, with summary information about the results obtained. In a similar manner, the borehole record should clearly indicate the location of and the results obtained from test specimens prepared form the respective section of the retrieved borehole core and later tested in the laboratory.

The top level relative to the project or site datum shall be clearly indicated on the borehole logs and all stratigraphic data is to be presented in relation to depth measured from both a) surface level, and b) in relation to the site datum. This implies that borehole locations and levels need to be measured by a surveyor, or correlated to measurable stations within the site. Borehole logs presented without this information will be deemed incomplete and will not be considered acceptable.

All field investigations shall be recorded and reported such that third persons are able to check and understand the results. e borehole log or record should contain the following sections, with each having the respective information as obtained before, during or after the drilling process.

11.1 Borehole identification and location, project and client identification, site location

The borehole log header should contain the following information:

(a) name of enterprise performing the sampling by drilling or excavation or groundwater measurements;

(b) name of client or representative;

(c) date of sampling by drilling or excavation or groundwater measurements;

(d) name and number of project;

(e) number of borehole, trial pit, heading or shaft;

(f) position and elevation of borehole, trial pit, heading or shaft location;

(g) borehole direction: inclination and orientation;

(h) whenever possible the depth of the free groundwater level;

(i) the specifications and the type of drilling rig and sampler used;

(j) brief description of weather conditions at time of drilling

(k) information on any attached records;

(l) name and signature of the responsible driller.

11.2 Drilling record

The drilling record shall be attached to the summary log and include the following essential information, if applicable:

(a) name of enterprise performing the drilling;

(b) name of client or representative;

(c) date of drilling;

(d) name and number of project;

(e) identification of the borehole;

(f) borehole diameters;

(g) the method of the pre-drilling, if used;

(h) ramming used;

(i) the use of casing and depth of the casing tip;

(j) the use of flushing medium and the level of the flushing medium in the borehole;

(k) flushing medium pressure and circulated volume;

(l) drilling parameters;

(m) name of the driller responsible.

The above information shall be organized in terms of individual drilling runs, and arranged graphically on the borehole log, with respect to depth. The following information should be provided for each run:

(a) The depth of drilling, casing advance or test/sampler penetration

(b) The equipment used – type of sampler or casing

(c) The elevation at the start and end of the drilling run, relative to site datum. When the borehole is inclined, the elevation should be calculated and present accordingly, since this would follow a different scale to the drilled depth.

(d) The amount of recovered core, expressed as a percentage of the overall drilling run (the TCR or total core recovery)

(e) The solid core recovery (SCR), if applicable, expressed as a percentage of the overall drilling run

(f) The rock quality designation (RQD), if applicable, expressed as a percentage of the overall drilling run

(g) colour and colour shifts of flushing medium;

(h) loss, if any, of flushing medium;

(i) any interruptions, obstructions and difficulties encountered during the sampling operation, drilling, excavation or groundwater measurements;

11.3 Stratigraphy - identification and description of soil and rock

The record of identification and description of soil and rock shall form the main part of the borehole log and include the following essential information, if applicable, for every identifiable section of the retrieved core that is different from the rest of the core according to the following criteria:

(a) sample colour (referenced to the Munsell soil colour charts),

(b) consistency or strength,

(c) predominant particle or grain size, and reference to type of grading, when applicable

(d) degree of variation and texture

(e) classification in terms of geological formation within the stratigraphy of the Maltese Islands

(f) classification in terms of member within the identified geological formation, according to the stratigraphy of the Maltese islands

Preliminary identification and description of soil and rock should be based on visual examination according to EN ISO 14688-1 and EN ISO 14689-1;

When describing rock, the presence of discontinuities and voids should be clearly indicated. Such descriptions should include the following information, with respect to the nature of the discontinuity:

(a) The inclination of the discontinuity

(b) Spacing (for closely spaced and parallel discontinuities)

(c) Aperture (if discernible)
(d) Condition and strength of the sides of the discontinuity
(e) Any infill material within
(f) Any lining materials or alteration of the discontinuity sides with respect to the parent rock.

The stratigraphic record should include information about any heavily disturbed sections of retrieved core that render stratigraphic description and classification difficult or uncertain.

11.4 Groundwater levels

Any encountered ground water levels should be clearly indicated on the borehole logs. The method of measurement of such levels is to be indicated.

For boreholes close to sea level, the following information hall be presented:

(a) Actual water level at the time of drilling
(b) Mean sea level as described by the hydrographical charts of the Maltese Islands
(c) Chart datum relative to site datum
(d) If applicable, an indication of expected tidal variations for the site in question.

11.5 Undisturbed sampling, site tests and laboratory test record

The borehole log should also contain information about any undisturbed sampling, site tests or laboratory tests that were carried out on the respective section of the borehole or the retrieved core.

For undisturbed Shelby tube samples, the following information is to be presented on the borehole logs:

(a) Depth and elevation at which the sample was taken
(b) The diameter of the Shelby tube
(c) The length of soil plug recovered
(d) The bulk density of the soil plug, as calculated form the measured plug dimensions and overall mass of the filled sampler, less the mass of the empty sampler.
(e) The identification nomenclature used for the sealed Shelby tube sample
(f) A list of test that were subsequently carried out on specimens prepared from the Shelby tube sample.
(g) All unsuccessful sampling operations shall be recorded.

For site tests, such as the Standard Penetration Test (SPT) the following information is to be presented on the borehole logs:

(a) Depth and elevation at which the test was undertaken
(b) The three respective blow counts
(c) In the case of refusal, the penetration obtained, in mm, for 50 blows.
(d) All unsuccessful sampling operations shall be recorded.

For laboratory tests performed on specimens prepared from the retrieved core, or on the core itself, the following information is to be provided:

(a) Depth and elevation at which the test was undertaken
(b) The type of test carried out
(c) A brief description of the results obtained. In the case of unconfined compressive strength tests on rock, the bulk density of the material, the water content and the resultant unconfined compressive strength are to be presented at the respective depth on the borehole log.
(d) All unsuccessful laboratory tests or failed attempts at specimen preparation shall be recorded.

Stratigraphy, discontinuity data, ground water levels, sampling and test records, and drilling record should be presented side by side on the borehole log, referenced to the same scale showing both drilling depth and elevation with respect to site datum. When the borehole is inclined, the elevation should be calculated and presented accordingly, since this would follow a different scale to the drilled depth.

11.6 Installations

Any installations carried out within the borehole are to be indicated on the borehole log. This is relevant for installation of inclinometer tubes, lining for downhole geophysical tests or instrumentation such as piezometers.

11.7 Back-filling record

The record of the applied back-filling shall be attached to the borehole log and shall contain the following information, if applicable:

(a) name of enterprise performing the back-filling;

(b) name of client or representative;

(c) date of back-filling;

(d) name and number of project;

(e) identification of borehole, trial pit, heading or shaft;

(f) back-filling material;

(g) sections of back-filling;

11.8 Photos of retrieved core samples

Each borehole log is to be accompanied by the respective photographs of the boxes containing the retrieved core of the particular borehole. Such photographs are to be taken in the laboratory, under uniform lighting and from a point that is located directly overhead of the core box, to avoid distortion of the image. Each core boxes shall have the following information when photographed:

(a) Name of the site

(b) The borehole designation number

(c) The date drilled

(d) Indications of the depth the start and end of every core section

(e) Run markers to show the start and end of every individual run, as described on the borehole logs

(f) Separators to indicate notable changes in stratigraphy, as organised and presented on the borehole logs

(g) Scale bar that can be directly read and used for measuring purposes to the nearest 5cm, when the photograph is then printed to a width of at least 15cm

The background provided by the core box should be consistent throughout the same borehole and throughout the job. This is necessary to allow comparison between different boreholes.

12. Georadar investigation

Georadar investigation is based on the analysis of transmission, in structures and/or ground, of high frequency electromagnetic waves (usually from 100 MHz to 1 GHz).

The most used technique is “reflection”. y means of a transmitting antenna, pulses of electromagnetic

energy are sent into the zone to be investigated. The frequency of impulses is generally very high (10-100 kHz).

Receiving antennae record the signals reflected by the surfaces of discontinuity between materials of different electric and magnetic characteristics.

Georadar investigations permits to relieve discontinuities and zones of local specific characteristics; i.e.: cavities, ancient structures, steel elements, very porous, fractured or remoulded materials.

Depth of investigation depends on the main frequency of waves and the resistivity of the materials: about 2 m in concrete or masonry; 8-10 m in ground.

Higher frequencies allow details of discontinuity within limited depth to be obtained, whereas low frequencies allow investigation of broader and deeper zones.

12.1 Ground Penetrating Radar:

Ground Penetrating Radar (GPR) is an effective geophysical tool available to engineers and earth scientists because it provides real-time graphic images of the subsurface and virtually anything buried in it.

The device is typically used “on-the-fly” to cover large areas to instantly locate a broad range of both man-made and naturally occurring subsurface features. GPR has become the most diverse geophysical technique currently available to engineering and environmental professionals. When soil conditions are favorable, it is a very effective tool for locating man-made targets like pipelines, buried utility infrastructure, unexploded ordinance (UXO), and is equally effective on natural features such as stratigraphic geology, the water table, voids and fractures.

Typical applications include:

(a) brick, masonry and concrete integrity testing;
(b) determining fill thickness;
(c) mapping geologic stratigraphy;
(d) mapping aquifers, aquicludes;
(e) locating voids, shallow bedrock units, and fractures;
(f) archaeology;
(g) map shallow mine tunnels/caves;
(h) mapping buried utilities and pipes;
(i) forensics;
(j) map extent of certain contaminant plumes;
(k) site hazard clearance for trenching and drilling;
(l) unexploded ordinance (UXO);
(m) locating underground storage tanks, drums;
(n) image rebar in concrete;

The GPR instrument uses pulsed radio frequency (RF) energy to bounce signals off buried man-made objects and naturally occurring interfaces. The signals are reflected by contrasts in the dielectric properties, conductivity and magnetic permeability of targets within the host material. Units are usually cart-mounted, consisting of a recorder mounted on the handlebar an antenna assembly very close to or actually coupled the ground. The antenna assembly typically consists of a bow-tie transmitter and receiver.

Different antennae operating at frequencies ranging from 25 MHz to 2 GHz are selected according to the objective. The reflected signals return to a receiver creating a continuous graphic profile of the

subsurface. Data is usually stored for optional post data processing and enhancement, and for producing hard copies for client reports.

13. Laboratory Tests

Laboratory tests shall be executed according to the following standards (preferred standard is shown shaded):

Table 13-1 – Schedule of standards for laboratory tests

Laboratory tests	ASTM	British Standards	Italian Standards
Opening undisturbed samples, description, Photo, Pocket Penetrometer and TV tests	ASTM D2488	BS5930	Racc. AGI 1977
Natural water content	ASTM D2216	BS 1377-2:1990:3	CNR-UNI 10008
Natural unit weight	ASTM D2937 ASTM D1188	BS 1377 T15/D BS 1377 T15/E	CNR B.U.22
Specific weight of grains	ASTM D854	BS 1377-2:1990	CNR B.U.63
Liquidity, Plasticity and Shrinkage Limits	ASTM D1188 ASTM D4318	BS 1377-2:1990	CNR-UNI 10014
Grain size distribution - Sieve analysis	ASTM D422 ASTM D421	BS 1377-2:1990:9	CNR B.U.23 Racc. AGI 1994
Grain size distribution - < 0.074 mm	ASTM D1140	BS 1377-2:1990:9.5	CNR B.U.75
Oedometer IL test	ASTM D4186	BS 1377-5:1990	Racc. AGI 1994
Oedometer ISP swelling test (under pressure control)	ASTM D4546	BS 1377-5:1990	
Oedometer ISS swelling test (under strain control)	ASTM D4546	BS 1377-5:1990	
Triaxial test (UU CU CD)	ASTM D2850 ASTM D4767	BS 1377-7:1990 BS 1377-8:1990	Racc. AGI 1994
Shear tests CD (Casagrande box) peak and residual shear strength	ASTM D3080	BS 1377-7:1990	Racc. AGI 1994
Unconfined Compression Strength	ASTM D2166 ASTM D2938 ISRM suggested methods		
$CaCO_3$, sulphate and chlorite content	ASTM D 4373	BS 1377-3:1990	D.M. 11/05/1992

13.1 Special requirements for oedometer tests

Oedometer tests on clays and weak rocks should be inclusive of one unload-reload cycle unless otherwise requested by the Engineer.

Loading will occur via 5 loading stages, increasing in logarithmic steps up to 20MPa (1.25, 2.5, 5.0, 10.0, 20.0 MPa), inclusive of creep stages (i.e. Individual loading stages of 5-day duration), and unload-reload cycles (unload cycles to have 1 day duration).

The results of the oedometer tests, inclusive of time-deformation curves, should be corrected for instrument compliance. The compliance measurements are to be reported separately for each stage.

Reporting is to include:

(a) Compliance measurements for each loading stage

(b) Information regarding the initial state of the specimen: dimensional data, bulk density, water content, degree of saturation, initial void ratio, location of specimen within sample retrieved from the ground investigation

(c) Time deformation curves, inclusive of time to 50%, 90% or 100% consolidation (as relevant), as interpreted from the curves

(d) Coefficient of secondary compression ($C\alpha$) as interpreted from each time-deformation curve

(e) Void ratio vs applied vertical effective stress, for all loading and unloading cycles

(f) determination of coefficient of volumetric compressibility (m_v in m^2/MN), oedometric permeability (k, in m/s) coefficient of consolidation (c_v in m^2/yr) and coefficient of secondary compression ($C\alpha$) plotted in relation to vertical effective stress, on a semi-logarithmic plot (effective stress plotted on a logarithmic axis).

All oedometric test data is to be provided in .xlsx format, to allow further interpretation by the engineer.

13.2 Special requirements for triaxial tests

Drained triaxial tests with pore pressure measurement will need to be carried out at three mean confining pressures (p') of 200, 600 and 1500kPa (this requires a triaxial cell capable of resisting at least 2500kPa.

Triaxial tests on clays and weak rocks should be inclusive of saturation stages, B-tests to confirm the achieved state of saturation, one isotropic consolidation stage, and one shear stage to specimen failure.

Specimens of weak rock that are to be tested in the triaxial equipment should be 38mm in diameter and 76mm high. These are to be prepared on an engineering lathe, and not by manual techniques, as the material is likely to be too stiff to allow preparation by manual soil lathe.

The triaxial tests are to be carried out with top and side drainage (using typical paper lantern drains). **Due to the stiffness of these materials, measurement of compliance of the triaxial apparatus during shear is necessary, for accurate interpretation of results.**

For the weak rocks at Santa Marija Church, a B-Value of at least 0.93 is the minimum admissible for the test results to be considered valid. This is likely to require back pressures of the order of 800kPa, applied in stages.

Shear of the specimens is to be carried out under DRAINED conditions, to an axial strain of at least 10%.

The results of the triaxial tests should be corrected for instrument compliance. The compliance measurements are to be reported separately for each stage.

Reporting is to include:

(a) Information regarding the state of the sample from which the triaxial test specimen was prepared, including length, diameter, weight, date sampled, level of protection prior to specimen preparation, date opened, photo of the sample immediately after opening, complete with scale information and colour charts within the same photo.

(b) Information regarding the initial state of the specimen: date of preparation, dimensional data, bulk density, water content, degree of saturation, initial void ratio, location of specimen within sample retrieved from the ground investigation, location of specimen in relation to other triaxial

tests specimens used for subsequent interpretation of results, photos of the specimen after mounting in the triaxial cell but prior to covering with the side drains or membrane.

(c) Change in water content between opening of the sample, and end of preparation of the specimen

(d) Date of mounting in triaxial cell and time of start of test

(e) Suction measurement data (pore pressure measurements during 24hour equalisation with all valves closed, after application of an initial reference cell pressure of 300kPa.

(f) Data relating to the various saturation stages, including cell and back pressure values, water ingress into the specimen with time, and final B value obtained, for each stage.

(g) Results of the isotropic consolidation stage, including the cell and back pressures, the pore pressure decay with time, and the change in volume of the specimen with time, and the final degree of consolidation deemed to have been achieved

(h) Details of how the isotropic consolidation data was used to assess the required time to complete the shearing stage, and the assumptions made in this regard.

(i) Results of the shearing stage, including the following as a minimum:

(j) Change in pore pressure with time and with axial strain (even for drained tests)

(k) The development of deviator stress q' (=σ_1'-σ_3') in kPa plotted vs. shear strain ε_s (%)

(l) The development of volumetric strain $\Delta v/V$ (%) plotted vs. axial strain ε_a (%)

(m) Stress paths of deviator stress q' (=σ_1'-σ_3') in kPa plotted vs. mean stress p' (=(σ_1'+2σ_3')/3) in kPa on the respective squared plot (i.e. both axes with equal scales starting from zero kPa

All triaxial test data is to be provided in .xlsx format, to allow further interpretation by the engineer.

13.3 Uniaxial compression tests for determining the uniaxial compression strength.

Cylindrical specimens obtained by coring are to be used to determine the uniaxial compression strength through laboratory tests in accordance with ISRM suggested methods " Part 1- Suggested Method for determination of the uniaxial compressive strength of rock materials" :

Procedure

Test specimens shall be right circular cylinders having a height to diameter ratio of 2.5-3.0 and a diameter preferably of not less than NX core size, approximately 54 mm. The diameter of the specimen should be related to the size of the largest grain in the rock by the ratio of at least 10:1.

The ends of the specimen shall be flat to 0.02 mm and shall not depart from perpendicularity to the axis of the specimen by more than 0.001 radian (about 3.5 min) or 0.05 mm in 50 mm.

The sides of the specimen shall be smooth and free of abrupt irregularities and straight to within 0.3 mm over the full length of the specimen.

The use of capping materials or end surface treatments other than machining is not permitted.

The diameter of the test specimen shall be measured to the nearest 0.1 mm by averaging two diameters measured at right angles to each other at about the upper-height, the mid-height and the lower height of the specimen. The average diameter shall be used for calculating the cross-sectional area. The height of the specimen shall be determined to the nearest 1.0 mm.

Samples shall be stored, for no longer than 30 days, in such a way as to preserve the natural water content, as far as possible, and tested in that condition.* This moisture condition shall be reported in accordance with "Suggested method for determination of the water content of a rock sample", Method 1, ISRM Committee on Laboratory Tests, Document No. 2, First Revision, December 1977.

Load on the specimen shall be applied continuously at a constant stress rate such that failure will occur within 5-10 min of loading, alternatively the stress rate shall be within the limits of 0.5-1.0 MPa/s.

The maximum load on the specimen shall be recorded in newtons (or kilonewtons and meganewtons where appropriate) to within 1%.

The number of specimens tested should be determined from practical considerations but at least five are preferred.

Calculations

The uniaxial compressive strength of the specimen shall be calculated by dividing the maximum load carried by the specimen during the test, by the original cross-sectional area.

Reporting of results

Reporting of results should include the following:

(a) Lithologic description of the rock.

(a) Orientation of the axis of loading with respect to specimen anisotropy, e.g. bedding planes, foliation, etc.

(b) Source of sample, including: geographic location, depth and orientations, dates and method of sampling and storage history and environment.

(c) Number of specimens tested.

(d) Specimen diameter and height.

(e) Water content and degree of saturation at time of test.

(f) Test duration and stress rate.

(g) Date of testing and type of testing machine.

(h) Mode of failure, e.g. shear, axial cleavage, etc.

(i) Any other observations or available physical data such as specific gravity, porosity and permeability citing the method of determination for each.

(j) . (k) Uniaxial compressive strength for each specimen in the sample, expressed to three significant figures, together with the average result for the sample. The pascal (Pa) or its multiples shall be used as the unit of stress and strength.

(k) (l) Should it be necessary in some instances to test specimens that do not comply with specifications as stated above these facts shall be noted in the test report.

13.4 Uniaxial compression tests for determining deformability in uniaxial compression.

This method of test is intended to determine stress-strain curves and Young's modulus and Poisson's ratio in uniaxial compression of a rock specimen of regular geometry. The test is mainly intended for classification and characterization of intact rock.

Cylindrical specimens obtained by coring are to be used to determine the uniaxial compression strength through laboratory tests in accordance with ISRM suggested methods “ Part 2- Suggested Method for determining deformability of rock materials in uniaxial compression” :

Strain measurement is to be achieved using linear variable differential transformers (LVDTs), optical devices or other suitable measuring devices that allow mounting on the specimen without changing its water content. Their design shall be such that the average of two axial strain measurements, equally spaced, and one circumferential strain measurement can be determined for each increment of load. The devices should be robust and stable, with strain sensitivity of the order of 5×10^{-6}.

Both axial and circumferential strains shall be determined within an accuracy of 2% of the reading and

a precision of 0.2 percent of full scale.

If LVDT's are used for measuring axial deformation due to loading, these devices should be graduated to read in 0.002 mm units and accurate within 0.002 mm in any 0.02 mm range and within 0.005 mm in any 0.25 mm range. The LVDT's should not encroach within D/2 of the specimen ends.

Simultaneous recording the loads and deformations is to be achieved by electronic data logger capable of recording several measurements per second.

(a) Test specimens shall be right circular cylinders having a height to diameter ratio of 2.5-3.0 and a diameter preferably of not less than NX core size, approximately 54 mm. The diameter of the specimen should be related to the size of the largest grain in the rock by the ratio of at least 10:1.

(b) The ends of the specimen shall be flat to 0.02 mm and shall not depart from perpendicularity to the axis of the specimen by more than 0.001 radian (about 3.5 min) or 0.05 mm in 50 mm.

(c) The sides of the specimen shall be smooth and free of abrupt irregularities and straight to within 0.3 mm over the full length of the specimen.

(d) The use of capping materials or end surface treatments other than machining is not permitted.

(e) The diameter of the test specimen shall be measured to the nearest 0.1 mm by averaging two diameters measured at right angles to each other at about the upper-height, the mid-height and the lower height of the specimen. The average diameter shall be used for calculating the cross-sectional area. The height of the specimen shall be determined to the nearest 1.0 mm.

(f) Moisture can have a significant effect on the deformability of the test specimen. When possible, in situ moisture conditions should be preserved until the time of the test. When the characteristic of the rock material under conditions varying from saturation to dry is required, proper note shall be made of moisture conditions so that correlation between deformability and moisture content can be made. The moisture condition shall be reported in accordance with "Suggested method for determination of the water content of a rock sample", Method 1, ISRM Committee on Laboratory Tests, Document No. 2, December 1977.

(g) Load on the specimen shall be applied continuously at a constant stress rate such that failure will occur within 5—10 min of loading, alternatively the stress rate shall be within the limits of 0.5—1.0 MPa/s.

(h) Load and axial and circumferential strains or deformations shall be recorded at evenly spaced load intervals during the test, if not continually recorded. At least ten readings should be taken over the load range to define the axial and diametric stress-strain curves.

(i) It is sometimes advisable for a few cycles of loading and unloading to be performed.

(j) The number of specimens instrumented and tested under a specified set of conditions shall be governed by practical considerations but at least five are preferred.

Calculations

Axial strain, ε_a, and diametric strain, ε_d, may be recorded directly from strain indicating equipment or may be calculated from deformation readings depending upon the type of instrumentation used.

Axial strain is calculated from the equation:

$$\varepsilon_a = \frac{\Delta l}{l_o}$$

Where:

l_o= original measured axial length

Δl = change in measured axial length (defined to be positive for a decrease in length)

Diametric strain may be determined either by measuring the changes in specimen diameter or by measuring the circumferential strain. In the case of measuring the changes in diameter, the diametric

strain is calculated from the equation

$$\varepsilon_d = \frac{\Delta d}{d_o}$$

Where:

d_o= original undeformed diameter of the specimen

Δd = change in diameter (defined to be negative for an increase in diameter)

In the case of measuring the circumferential strain ε_d, the circumference is $C = \pi d$, thus the change in circumference is $\Delta C = \pi \Delta d$. Consequently, the circumferential strain, ε_c, is related to diametric strain, ε_d, by

$$\varepsilon_c = \frac{\Delta C}{C_o} = \frac{\Delta d}{d_o}$$

so that $\varepsilon_c = \varepsilon_d$ where C_o and d_o are original specimen circumference and diameter, respectively.

The compressive stress in the test specimen, σ, is calculated by dividing the compressive load P on the specimen by the initial cross-sectional area, A_o. Thus:

$$\sigma = \frac{P}{A_o}$$

where in this test procedure, compressive stresses and strains are considered positive.

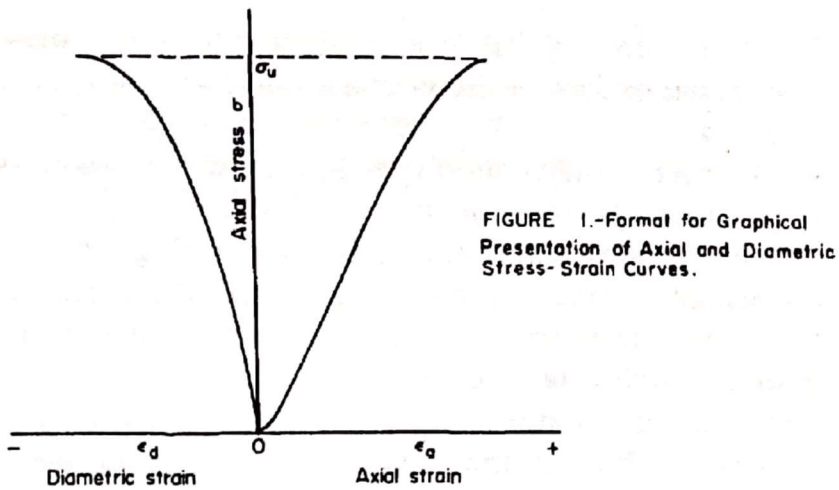

Figure 13-1 - Format for graphical presentation of axial and diametric stress-strain curves.

Figure 13-1 illustrates typical plot of axial stress versus axial and diametric strains. These curves show typical behaviour of rock materials from zero stress up to ultimate strength, σ_u. The complete curves give the best description of the deformation behaviour of rocks having non-linear stress-strain behaviour at low and high stress levels.

Axial Young's modulus, E (defined as the ratio of the axial stress change to axial strain produced by the stress change) of the specimen may be calculated using any one of several methods employed in accepted engineering practice. The most common methods, listed in Figure 13-2, are as follows:

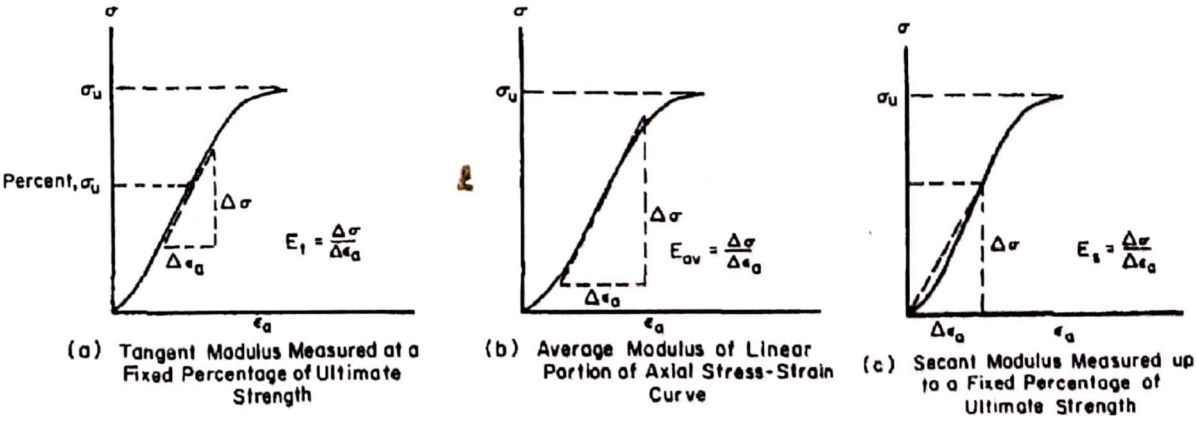

Figure 13-2 – Methods for calculating Young's Modulus from axial stress-strain curve

Tangent Young's modulus, E_t, is measured at a stress level which is some fixed percentage of the ultimate strength (Figure 13-2a). It is generally taken at a stress level equal to 50% of the ultimate uniaxial compressive strength.

Average Young's modulus, E_{av}, is determined from the average slopes of the more-or-less straight line portion of the axial stress-axial strain curve (Figure 13-2b).

Secant Young's modulus, E_s, is usually measured from zero stress to some fixed percentage of the ultimate strength (Figure 13-2c), generally at 50%.

Axial Young's modulus E is expressed in units of stress i.e. pascal (Pa) but the most appropriate multiple is the gigapascal (GPa = 10^9 Pa).

Poisson's ratio, v, may be calculated from the equation:

$$\nu = \frac{\text{slope of axial stress} - \text{strain curve}}{\text{slope of diametric stress} - \text{strain curve}}$$

$$\nu = \frac{\text{E}}{\text{slope of diametric curve}}$$

where the slope of the diametric curve is calculated in the same manner for either of the three ways discussed for Young's modulus. Note that Poisson's ratio in this equation has a positive value, since the slope of the diametric curve is negative by the conventions used in this procedure.

The volumetric strain, ε_v, for a given stress level is calculated from the equation:

$$\varepsilon_v = \varepsilon_a + 2\varepsilon_d$$

Reporting of results

Reporting of results should include the following:

(a) Lithologic description of the rock.

(b) Orientation of the axis of loading with respect to specimen anisotropy, e.g. bedding planes, foliation, etc.

(c) Source of sample, including: geographic location, depth and orientations, dates and method of sampling and storage history and environment.

(d) Number of specimens tested.

(e) Specimen diameter and height.

(f) Water content and degree of saturation at time of test.

(g) Test duration and stress rate.

(h) Date of testing and type of testing machine.

(i) Mode of failure, e.g. shear, axial cleavage, etc.

(j) Any other observations or available physical data such as specific gravity, porosity and permeability citing the method of determination for each.

(k) Values of applied load, stress and strain as tabulated results or as recorded on a chart.

(l) (Young's modulus and Poisson's ratio for each specimen in the sample, expressed to three significant figures, together with the average result for the sample.

(m) Method of determination of Young's modulus and at what axial stress level or levels determined.

(n) Should it be necessary in some instances to test specimens that do not comply with the above specifications, these facts shall be noted in the test report.

13.5 “Brazilian tests” for determining the indirect tensile strength

This test, in accordance with ISRM Suggested Methods – Part 2: Suggested method for determining indirect tensile strength by the Brazil Test, is intended to measure the uniaxial tensile strength of prepared rock specimens indirectly. The justification for the test is based on the experimental fact that most rocks in biaxial stress fields fail in tension at their unaxial tensile strength when one principal stress is tensile and the other finite principal stress is compressive with a magnitude not exceeding three times that of the tensile principal stress.

Apparatus

Two steel loading jaws designed so as to contact a disc-shaped rock sample at diametrically-opposed surfaces over an arc of contact of approx. 10° at failure. The suggested apparatus to achieve this is illustrated in Fig. l. The critical dimensions of the apparatus are the radius of curvature of the jaws, the clearance and length of the guide pins coupling the two curved jaws

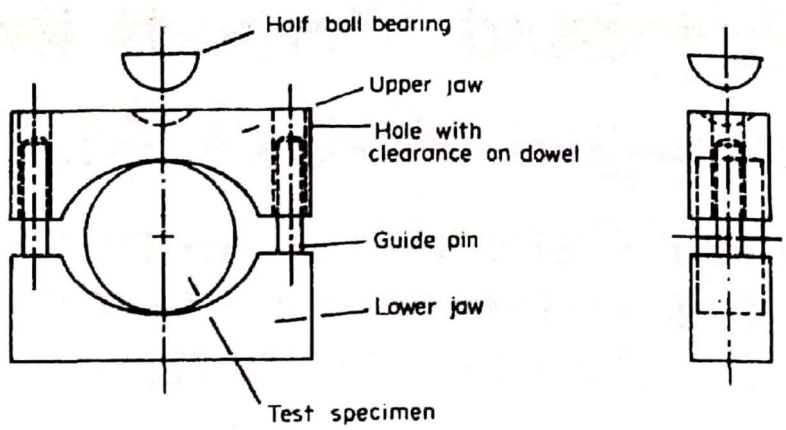

Figure 13-3 - Apparatus for Brazil test.

and the width of the jaws. These are as follows: Radius of jaws—l.5 x specimen radius; guide pin clearance— permit rotation of one jaw relative to the other by 4 x 10 -3 rad out of plane of the apparatus (25 mm penetration of guide pin with 0.1 mm clearance); width of jaws—l.l x specimen thickness. The remaining dimensions can be scaled from Fig. 1. The upper jaw contains a spherical seating conveniently formed by a 25-mm diameter half-ball bearing.

Double thickness (0.2—0.4 mm) adhesive paper strip (masking tape) with a width equal to or slightly greater than the specimen thickness.

A suitable machine for applying and measuring compressive loads to the specimen. It shall be of sufficient capacity and be capable of applying load at a rate conforming to the requirements set out in section 3. It shall be verified at suitable time intervals and shall comply with accepted national

requirements such as prescribed in either ASTM Methods E4. Verification of Testing Machines or British Standard 1610, Grade A or Deutsche Nor-men DIN 51 220 and DIN 51 223, Klasse 1.

A spherical seat, if any, of the testing machine crosshead shall be placed in a locked position, the two loading surfaces of the machine being parallel to each other.

It is preferable but not obligatory that the testing machine be fitted with a chart recorder to record load against displacement to aid in the measurement of the failure load.

Procedure

The test specimens should be cut and prepared using clean water. The cylindrical surfaces should be free from obvious tool marks and any irregularities across the thickness of the specimen should not exceed 0.025 mm. End faces shall be flat to within 0.25 mm and square and parallel to within 0.25˚.

Specimen orientation shall be known and the water content controlled or measured and reported in accordance with the "Suggested method for determination of water content of a rock sample", Method I, ISRM Committee on Laboratory Tests, Document No. 2, November 1972.

The specimen diameter shall not be less than NX core size, approximately 54 mm, and the thickness should be approximately equal to the specimen radius.

The test specimen shall be wrapped around its periphery with one layer of the masking tape and mounted squarely in the test apparatus such that the curved platens load the specimen diametrically with the axes of rotation for specimen and apparatus coincident.

Load on the specimen shall be applied continuously at a constant rate such that failure in the weakest rocks occurs within 15-30 s. A loading rate of 200 N/s is recommended,

Where the testing machine is fitted with a force/ displacement recorder, a record should be taken during testing - so that the load for primary fracture can be precisely determined (in some cases load continues to increase after primary failure as the split specimen is still bearing load). If a load/displacement recorder is not available on the testing machine, then care must be taken by the operator to detect the load at primary failure. At primary failure there will be a brief pause in the motion of the indicator needle. However, the difference between the load at primary failure and ultimate load bearing capacity is at most only about 5%.

The number of specimens per sample tested should be determined from practical considerations, but normally ten are recommended.

Calculations

The tensile strength of the specimen at, shall be calculated by the following formula (in MPa):

$$\sigma_t = \frac{0.636P}{Dt}$$

where

P is the load at failure (N),

D is the diameter of the test specimen (mm),

t is the thickness of the test specimen measured at the center (mm).

Reporting of results

Reporting of results should include the following:

(a) Lithological description of the rock.

(b) Orientation of the axis of loading with respect to specimen anisotropy, e.g. bedding planes, foliation, etc.

(c) Source of sample, including: geographic location, depth and orientation, dates and method of

sampling and storage history and environment.

(d) Number of specimens tested.

(e) Specimen diameter and height.

(f) Water content and degree of saturation at time of test.

(g) Test duration and stress rate.

(h) Date of testing and type of testing machine.

(i) Mode of failure.

(j) Any other observations or available physical data such as specific gravity, porosity and permeability, citing the method of determination for each.

(k) The tensile strength for each specimen in the sample, expressed to three significant figures, together with the average result for the sample.

14. Foundation Investigation

The foundation investigation shall be carried out via trial pits excavated next to the outer walls of the church

Figure 14-1 – Proposed investigative work for ground investigation, showing boreholes and trial pits that need to be drilled or excavated.

14.1 Inclined boreholes for foundation investigation

See ground investigation – boreholes, sampling, laboratory tests.

Inclined borehole logs will need to be presented with clear information related to inclination, depth and observations made along the way. Further details are presented in the "Structural Investigation" section. All reporting for these boreholes is to follow the specification in section 11 above.

14.2 Trial pits

A trial pit is an open excavation to examine the ground and to allow inspection of foundation conditions in-situ, to recover samples or to carry out field testing. Such trial pits are required to extend down to the lowest levels of the masonry foundations of the church, such that the actual level (or elevation) of these can be identified in relation to the ground strata and to ground level within and around the church.

Furthermore, the pits will be necessary to determine the construction typology of the foundations and their condition, as well as the nature of the ground strata at the lowest foundation level, where load is being transmitted to the ground. Excavation for these pits will also establish the presence or otherwise of any important anthropogenic or archaeological remains that may need to be taken into consideration during future consolidation interventions on the church.

Trial pits shall be excavated by machine to the required depth to enable visual examination and sampling from outside the pit as required. Hand-operated power tools may be used to assist excavation where necessary. Care is to be taken to avoid damaging any archaeological material which might be present. In such instances, works are to be halted and the Engineer and client alerted immediately.

Observation pits shall be adequately supported to enable personnel to enter safely and to permit in situ examination, soil sampling, archaeological investigation, measurements and testing as required.

Trial pits and trenches and observation pits and trenches shall be examined, photographed and described by a geotechnical engineer or engineering geologist. Such inspection will need to be carried out methodically and following a clockwise sequence around the four sides of the trial pit, finally proceeding to describe the floor. The observations carried out during this procedure are to be recorded on hand-drawn sketches that follow the same sequence and that clearly indicate how the observations on each side of the trial pit relate to each other (an example is given in Figure 14-2 below).

The sketches of the trial pit sides are to be accompanied by photographs that clearly show details of the ground conditions in the pit, with any support in place, if this is necessary. Such photographs shall contain clear labelling of the trial pit side to which they refer to, and include a graded linear scale to enable approximate measurement. Artificial lighting shall be used where necessary.

The Contractor shall keep pits and trenches free of surface water run-off. Groundwater shall be controlled by pumping from a sump to permit continuous work insofar as the rate of inflow of groundwater can he controlled by use of a 50 mm outlet diameter pump and the excavation remains stable.

Backfilling of the pit shall be carried out as soon as practicable with material replaced at similar depth as encountered. The backfilling shall be compacted in such a manner using excavation plant to minimise any subsequent depression at the ground surface. Paved areas shall be rebuilt.

Where pits and trenches are required to be left temporarily open, the Contractor shall provide fencing together with all necessary lighting and signing. Precautions shall he taken to protect the pits and trenches from the adverse effects of weather during this period.

Reporting

The trial pit observations, as described above and as exemplified in Figure 14-2 below, shall contain the following information:

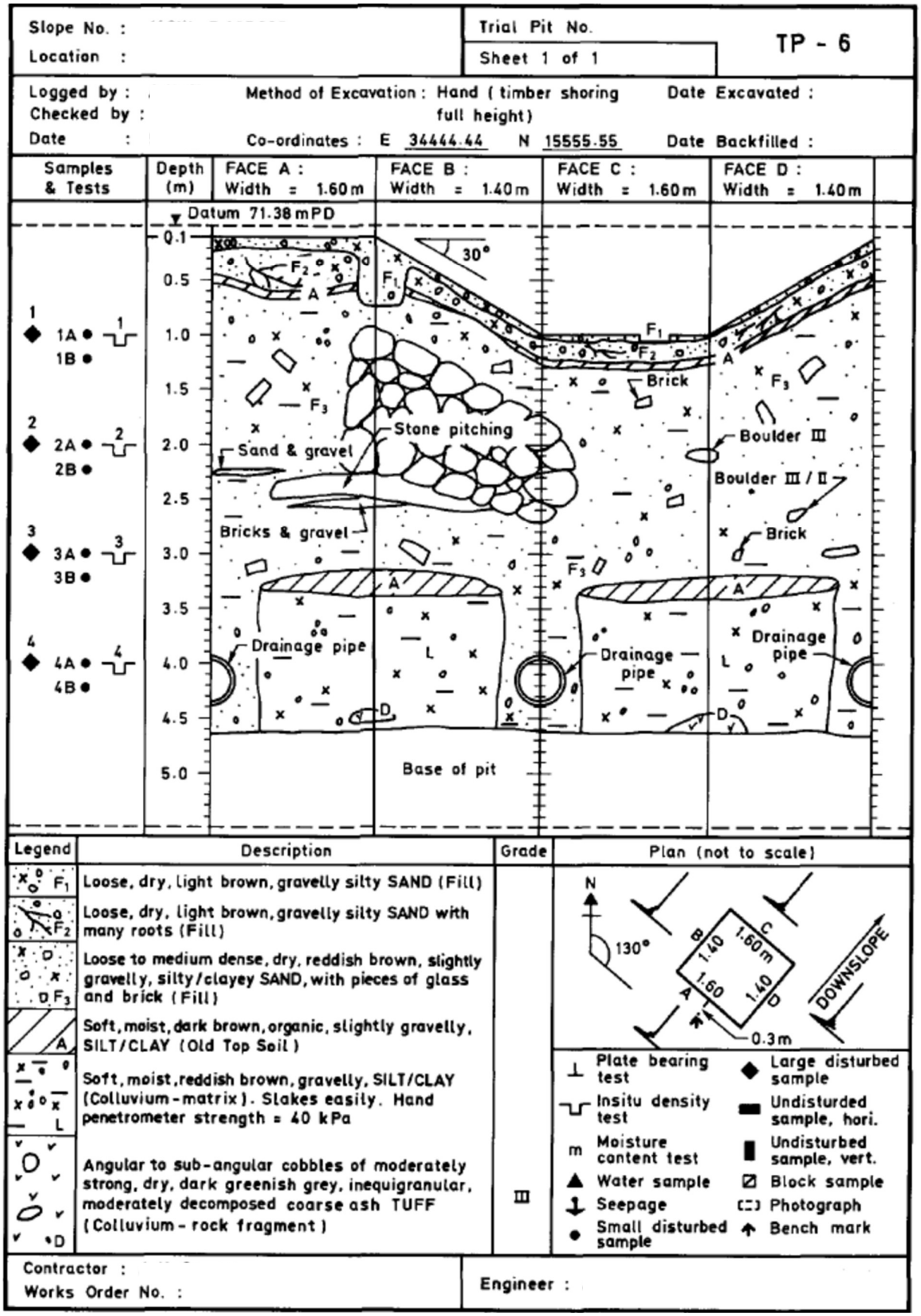

Figure 14-2 – Example of Trial pit logging form and data

(a) name of enterprise performing the excavation;
(b) name of client or representative;
(c) date of trial pit excavation
(d) date of trial pit inspection and logging
(e) date of trial pit backfilling
(f) name and number of project
(g) identification of the trial pit
(h) pit dimensions an clear identification of trial pit sides and their orientation relative to north
(i) the method of the excavation used
(j) description of masonry: dimensions, physical and mechanical characteristics of materials
(k) description of stratigraphy: physical and mechanical characteristics of soil or rock
(l) description of rock mass: observations of discontinuities and discontinuity sets, including information about orientation, dip, persistence, aperture, infill, condition of sides, and any seepage observed through the fissures.
(m) graphic sketch of main section and results (see Figure 14-2) ;
(n) photographs of all sides and of any notable features
(o) location and type of any samples taken from the masonry
(p) location and type of any in-situ tests carried out on the masonry
(q) location and type of any samples taken from the soil or rock
(r) location and type of any in-situ tests carried out on the soil or rock
(s) Position of the water table (if relevant)
(t) location and type of any man-made material or man-made structures observable within the trial pit (if relevant)
(u) hand penetrometer and hand vane test results (if relevant)
(v) name and signature of the engineer responsible of the survey.

15. Structural investigation

The structural investigation is aimed towards obtaining an understanding of the building typology of the church and its masonry structure. A number of cores will be drilled for this purpose, around the church, using small diameter boreholes (<65mm) that may be drilled inclined. Coring will generally be achieved using a rotary coring saw having a diamond or carbide cutting edge. If the investigative boreholes are drilled from the exterior faces of the walls of the church, water may be used as a drilling fluid to transport the returns to the surface.

This coring operation shall allow samples to be extracted from the walls of the church, on which laboratory tests can be conducted; this is particularly important when identifying the chemical-physical and mechanical characteristics of mortars. Additional investigation can be made inside the borehole, to help define the structural and mechanical properties of the masonry.

For the analysis of the structural characteristics of a stone masonry, a video camera survey can be used in combination with the coring. Sometimes the coring is not enough to give detailed information concerning the characteristics of the masonry, mainly when the materials which compose the masonry are weak or if there are many voids inside the masonry. A detailed survey of the lateral surface of the borehole, carried out with a video camera of good quality, can give precious and detailed information on the composition of the masonry, on the nature of the material which composes the masonry and on

the dimensions of the voids and anomalies included in the inner part of the masonry.

A small colour video camera may be inserted into the borehole allowing a detailed study of the surface of the borehole. A steel measuring tape is to be inserted in the borehole such that the camera survey includes continuous information that allows determination of the borehole depth at each image of video frame. The video camera can be of small diameter (e.g. an endoscope camera of 10 mm dia.), having a sensitivity of 1 Lux and is connected to a digitizing device that is able to transmit pictures of the borehole in real time and that allows recording on suitable electronic media.

The results of this study may be recorded and archived for further analysis after the boreholes have been sealed. The information obtained by this survey shall include:

- the bonding characteristics of the masonry;
- measurements of the size of the internal cavities;
- the analysis of the propagation of any internal cracks and measurements of their openings.

Reporting of results

Reporting of results should include the following:

(a) the same borehole logging information requirements specified in section 11 above

(b) graphic sketch of main results, showing the outer and inner surfaces of the wall or foundation that has been investigated

(c) photographs by main video images taken inside the borehole, referenced on the borehole log

The entire digital video footage is to be provided in digital (*.mp3) format, to allow further interpretation by the engineer.

Closing off of the investigative boreholes

The first part of each core is to be retained to allow closing off of the borehole using a mortar mix that is approved by the engineer. The boreholes shall be closed after approval has been sought from the engineer.